FLIR K55

P/N: 72201-0206

Copyright

© 2016, FLIR Systems, Inc.

All rights reserved worldwide. Names and marks appearing herein are either registered trademarks or trademarks of FLIR Systems and/or its subsidiaries. All other trademarks, trade names or company names referenced herein are used for identification only and are the property of their respective owners.

Document identity

Publ. No.: 72201-0206
Release:
Commit: 35560
Language: en-US
Modified: 2016-05-17
Formatted: 2016-07-01

Website

http://www.flir.com

Customer support

http://support.flir.com

Disclaimer

Specifications subject to change without further notice. Camera models and accessories subject to regional market considerations. License procedures may apply. Products described herein may be subject to US Export Regulations. Please refer to exportquestions@flir.com with any questions.

General description
The FLIR K55 is a robust and reliable infrared camera designed to perform under extremely severe conditions. The FLIR K55 has an intuitive interface with a design that makes it easy to control even with a gloved hand. The crisp and clear image helps you to navigate through smoke and to make quick and accurate decisions.
Benefits:
• Robust and reliable: The FLIR K455 is designed to meet tough operating conditions. It can withstand a drop from 2 m (6.5 ft.) onto a concrete floor, is water resistant to IP67, and is fully operational up to +85°C (+185°F), or +260°C (+500°F) for 5 min. • Clear and crisp thermal images: The maintenance-free uncooled microbolometer sensor produces clear and detail-rich images of 320 × 240 pixels which have been further improved with FSX, a digital image processing enhancement technique. Thermal images are presented on a large, bright 4″ display, helping you to navigate and to make quick and accurate decisions. • Easy-to-use—also in a gloved firefighter's hand: An intuitive and simple user interface allows you to focus on the job. The FLIR K series can be controlled by just three large buttons on top of the unit. Ideal for a gloved firefighter's hand. • Recording

Imaging and optical data	
IR resolution	320 × 240 pixels
Thermal sensitivity/NETD	< 30 mK @ +30°C (+86°F)
Field of view (FOV)	51° × 38°
Depth of field	0.84 m to infinity (33 in. to infinity)
Focal length	9 mm (0.35 in.)
Spatial resolution (IFOV)	2.8 mrad

P/N: 72201-0206
© 2016, FLIR Systems, Inc.
#72201-0206; r. /35560; en-US

Imaging and optical data	
F-number	1.25
Image frequency	60 Hz
Focus	Fixed
Zoom	2× digital zoom

Detector data	
Detector type	Focal plane array (FPA), uncooled microbolometer
Spectral range	7.5–13 µm
Pitch	25 µm

Image presentation	
Display	4 in. LCD, 320 × 240 pixels, backlit
Auto range	Yes, selectable on/off using FLIR Tools
Contrast optimization	Digital image enhancement using FSX

Image presentation modes	
Image modes	• IR image ◦ TI Basic fire-fighting mode ◦ Black-and-white fire-fighting mode ◦ Fire mode ◦ Search-and-rescue mode ◦ Heat detection mode • Thumbnail gallery

Measurement	
Object temperature range	• –20°C to +150°C (–4°F to +302°F) • 0°C to +650°C (+32°F to +1202°F)
Accuracy	±4°C (±7.2°F) or ±4% of reading, for ambient temperature 10°C to 35°C (+50°F to 95°F)

Measurement analysis	
Spotmeter	1
Automatic hot detection	Heat detection mode (the hottest 20% of the of scene is colorized)
Isotherm	Yes

Set-up	
Set-up commands	Local adaptation of units, date and time formats
Languages	English

Storage of images	
Image storage	Standard JPEG
Storage media	Internal flash memory

P/N: 72201-0206
© 2016, FLIR Systems, Inc.
#72201-0206; r. /35560; en-US

Storage of images	
Image storage capacity	200 files in total **NOTE** The total number of files is co-dependent on the number of saved video clips.
Image storage mode	IR only
File formats	Standard JPEG

Image annotations	
Report generation	Separate software (FLIR Tools)

Video recording in camera	
Non-radiometric IR video recording	MPEG-4 to internal flash memory
Storage capacity	200 files in total, with a maximum duration of 5 minutes each. **NOTE** The total number of files is co-dependent on the number of saved images.

Video streaming	
Non-radiometric IR video streaming	Uncompressed colorized video using USB

USB	
USB	USB Mini-B

Compatibility	
Compatible with FLIR software	FLIR Tools

Data communication interfaces	
Interfaces	• Update from PC devices • Data transfer to and from PC

Power system	
Battery type	Li Ion
Battery voltage	3.6 V
Battery capacity	4.4 Ah, at +20°C to +25°C (+68°F to +77°F)
Battery operating time	Approx. 4 hours at +25°C (+77°F) ambient temperature and typical use
Charging system	• Battery is charged inside the camera • 2-bay charger • Optional In-truck charger
Charging time	2 h to 85% capacity, charging status indicated by LEDs
Charging temperature	0°C to +45°C (+32°F to +113°F)
Power management	Automatic shutdown and sleep mode
Start-up time from sleep mode	< 4 s.
Start-up time	< 17 s. (IR image, no GUI)

P/N: 72201-0206
© 2016, FLIR Systems, Inc.
#72201-0206; r. /35560; en-US

Environmental data	
Operating temperature range	• –20°C to +85°C (–4°F to +185°F) • +150°C (+302°F): 15 min. • +260°C (+500°F): 5 min.
Storage temperature range	–40°C to +85°C (–40°F to +185°F)
Humidity (operating and storage)	IEC 60068-2-30/24 h 95% relative humidity +25° C to +40°C (+77°F to +104°F) / 2 cycles
Relative humidity	95% relative humidity +25°C to +40°C (+77°F to +104°F) non-condensing
Directives	Designed to meet NFPA 1801:2013 specification: • Vibration • Impact acceleration resistance • Corrosion • Viewing surface abrasion • Heat resistance • Heat and flame • Product label durability
EMC	• EN 61000-6-2:2005 (Immunity) • EN 61000-6-3: 2011 (Emission) • FCC 47 CFR Part 15 B (Emission)
Magnetic fields	EN 61 000-4-8, Test level 5 for continuous field (severe industrial environment)
Encapsulation	IP 67 (IEC 60529)
Shock	25 g (IEC 60068-2-27)
Vibration	2 g (IEC 60068-2-6)
Drop	2 m (6.6 ft.) on concrete floor (IEC 60068-2-31)
Safety (power supply)	CE/EN/UL/CSA/PSE 60950-1

Physical data	
Camera weight, incl. battery	1.1 ±0.05 kg (2.4 ±0.1 lb.)
Battery weight	0.152 kg (0.3 lb.)
Camera size (L × W × H)	120 × 125 × 280 mm (4.7 × 4.9 × 11 in.)
Tripod mounting	UNC ¼"-20 (adapter needed)
Material	• PPSU • Silicon rubber • Aluminium, cast • Flame-resistant magnesium alloy

Shipping information	
List of contents	• Infrared camera • Battery (2 ea.) • Battery charger • Hard transport case • Lanyard strap • Neck strap • Power supply • Printed documentation • Retractable lanyard • Tripod adapter • USB cable
Packaging, weight	5.7 kg (12.6 lb.)

P/N: 72201-0206
© 2016, FLIR Systems, Inc.
#72201-0206; r. /35560; en-US

Shipping information	
Packaging, size	500 × 190 × 370 mm (19.7 × 7.5 × 14.6 in.)
EAN-13	4743254002012
UPC-12	845188010904
Country of origin	Estonia

Supplies & accessories:

- 1910423; USB cable Std A <-> Mini-B
- T198509; Cigarette lighter adapter kit, 12 VDC, 1.2 m/3.9 ft.
- T198125; Battery charger, incl. power supply with multi plugs (Exx, Kxx)
- T198310ACC; Li-Ion Battery pack 3.6 V 16 Wh
- T127724ACC; Neck strap
- T127722ACC; Retractable lanyard
- T198416ACC; Lanyard strap
- T198457ACC; Tripod Adapter, Kxx
- T198441ACC; Transport case Kxx
- T198322ACC; In-truck charger
- T199368ACC; Battery Li-ion 3.6 V, 4.4 Ah, 16 Wh

This document must not be communicated or copied completely or in part, without our permission. Any infringement will lead to legal proceedings.
FLIR SYSTEMS AB

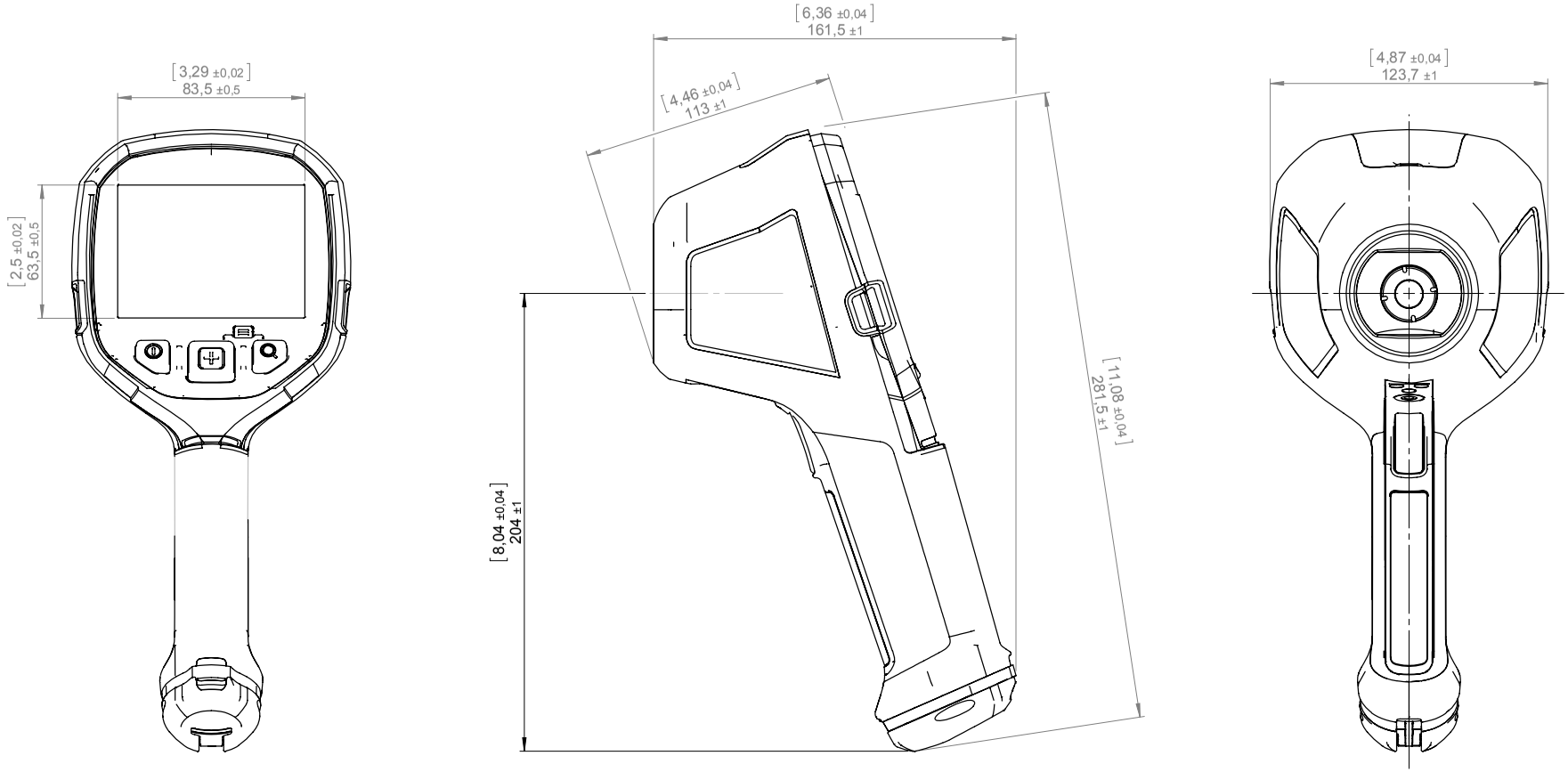

Denna handling får ej delges annan, kopieras i sin helhet eller delar utan vårt medgivande. Överträdelse härav beivras med stöd av gällande lag.
FLIR SYSTEMS AB

Konstr/Drawn P. MARCUS	Datum/Date 2013-01-23	Kontr/Check	Material -
Ändrad av/Modified by P. MARCUS	Ändrad/Modified 2013-01-23	Ytjämnhet/Roughness Ra µm	Ytbehandling/Surface treatment
Där ej annat anges/Unless otherwise stated Gen tol ISO 2768-mK Utdrag ur/Excerpt from ISO 2768-m 0,5-6 ±0,1 Hålkälsradier (6)-30 ±0,2 Fillet radii (30)-120 ±0,3 (120)-400 ±0,5 Kanter brutna (400)-1000 ±0,8 Edges broken	Benämning/Denomination Basic dimension drawing		

FLIR

Skala/Scale 1:2	Blad/Sheet 1(2)
ArtNo.	Size A3
Ritn nr/Drawing No T127798	Rev

This document must not be communicated or copied completely or in part, without our permission. Any infringement will lead to legal proceedings. FLIR SYSTEMS AB

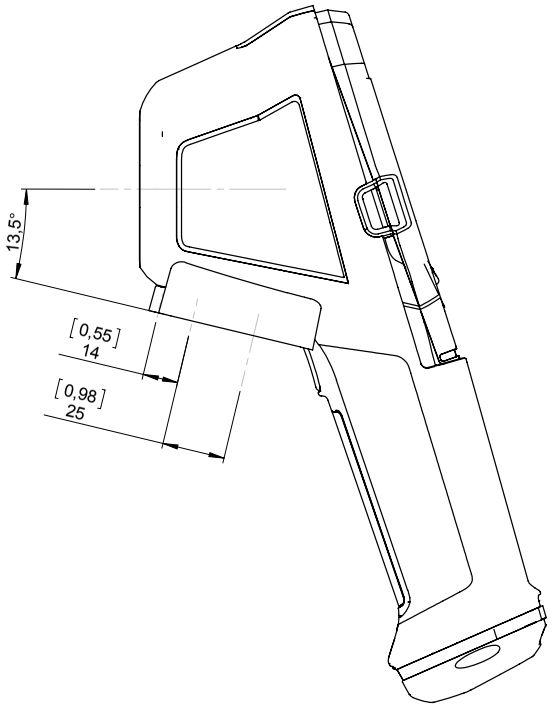

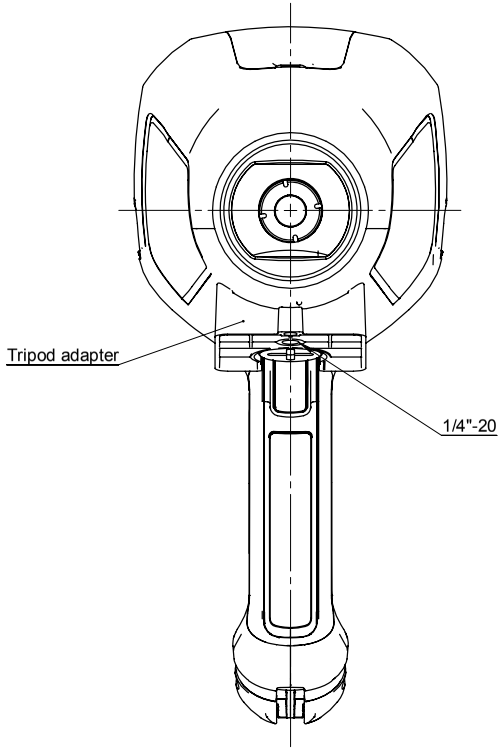

Konstr/Drawn P. MARCUS	Datum/Date 2013-01-23	Kontr/Check	Material -
Ändrad av/Modified by P. MARCUS	Ändrad/Modified 2013-01-23	Ytjämnhet/Roughness Ra µm	Ytbehandling/Surface treatment

Där ej annat anges/Unless otherwise stated
Gen tol ISO 2768-mK
Utdrag ur/Excerpt from ISO 2768-m

0,5-6	±0,1	Hålkälsradier
(6)-30	±0,2	Fillet radii
(30)-120	±0,3	
(120)-400	±0,5	Kanter brutna
(400)-1000	±0,8	Edges broken

Benämning/Denomination

Basic dimension drawing

Skala/Scale 1:2	Blad/Sheet 2(2)
ArtNo.	Size A3
Ritn nr/Drawing No T127798	Rev

FLIR

Denna handling får ej delges annan, kopieras i sin helhet eller delar utan vårt medgivande. Överträdelse härav beivras med stöd av gällande lag. FLIR SYSTEMS AB

This document must not be communicated or copied completely or in part, without our permission. Any infringement will lead to legal proceedings.
FLIR SYSTEMS AB

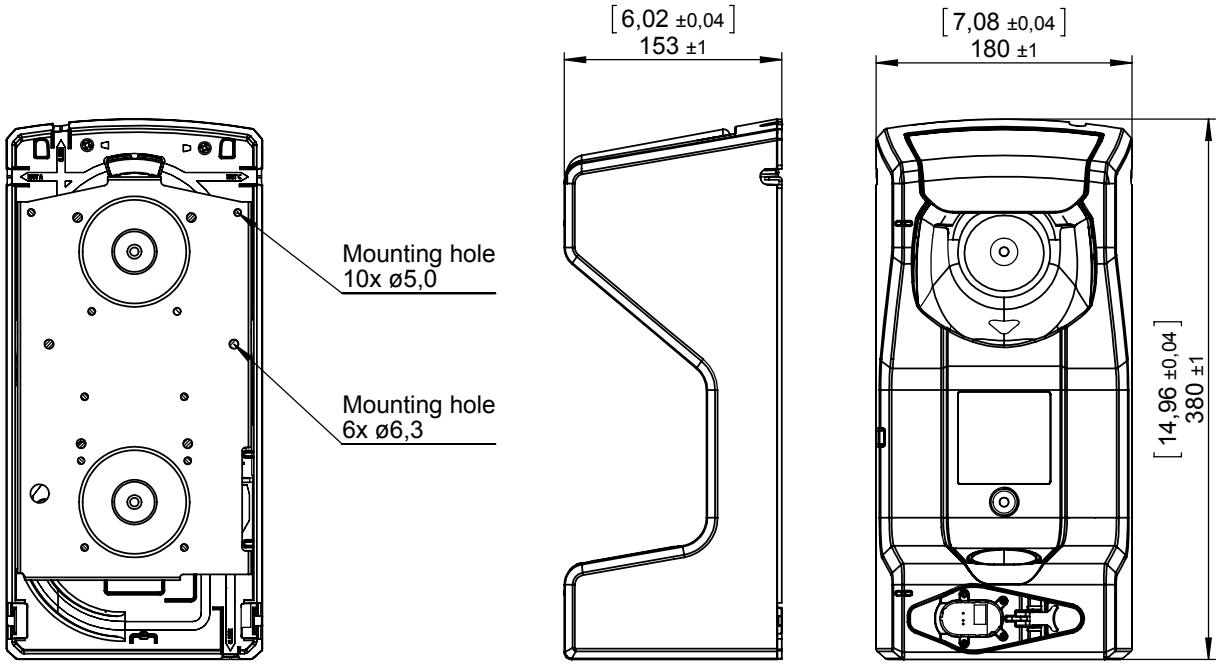

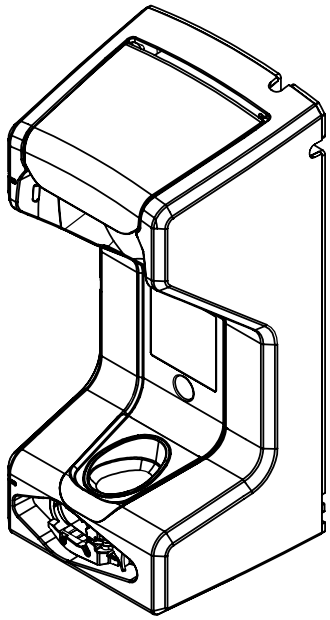

-

Konstr/Drawn	Datum/Date	Kontr/Check	Material
P. MARCUS	2013-04-08	MABR	
Ändrad av/Modified by	Ändrad/Modified	Ytjämnhet/Roughness	Ytbehandling/Surface treatment
P. MARCUS	2013-04-08	Ra µm	

Där ej annat anges/Unless otherwise stated
Gen tol ISO 2768-mK
Utdrag ur/Excerpt from ISO 2768-m

0,5-6	±0,1	Hålkälsradier
(6)-30	±0,2	Fillet radii
(30)-120	±0,3	
(120)-400	±0,5	Kanter brutna
(400)-1000	±0,8	Edges broken

Benämning/Denomination

Basic dimensions

In-truck charger

Skala/Scale 1:5

Blad/Sheet 1(1)

Art.No.

Size A4

Ritn nr/Drawing No T127865

Rev A

Denna handling får ej delges annan, kopieras i sin helhet eller delar utan vårt medgivande. Överträdelse härav beivras med stöd av gällande lag.
FLIR SYSTEMS AB

May 13, 2013 AQ320028

CE Declaration of Conformity

This is to certify that the System listed below have been designed and manufactured to meet the requirements, as applicable, of the following EU-Directives and corresponding harmonising standards. The systems consequently meet the requirements for the CE-mark.

Directives:

Directive 2004/108/EC;	**Electromagnetic Compatibility**
Directive 2006/95/EC;	**"Low voltage Directive"** (Power Supply)
Directive 2002/96/EC	**Waste electrical and electronic equipment; WEEE** (As applicable)

Standards:

Emission:	**EN 61000-6-3;**	**Electromagnetic Compatibility Generic standards - Emission**
Immunity:	**EN 61000-6-2;**	**Electromagnetic Compatibility; Generic standards - Immunity**
Safety (Power Supply):	**EN 60950;** (or other)	**Safety of information technology equipment**

System: **FLIR KXX series**

FLIR Systems AB
Quality Assurance

Björn Svensson
Director

FLIR Systems AB • Antennvägen 6 • P.O. Box 7376 • SE-187 15 Täby • Sweden
Telephone: +46 8 753 25 00 • Telefax: +46 8 753 23 64
Registered No: 556256-6579
www.flir.se