FLIR A310pt 90° (9 Hz) NTSC

P/N: 60902-1105

Copyright

© 2016, FLIR Systems, Inc.

All rights reserved worldwide. Names and marks appearing herein are either registered trademarks or trademarks of FLIR Systems and/or its subsidiaries. All other trademarks, trade names or company names referenced herein are used for identification only and are the property of their respective owners.

Document identity

Publ. No.: 60902-1105
Release:
Commit: 35207
Language: en-US
Modified: 2016-04-27
Formatted: 2016-04-28

Website

http://www.flir.com

Customer support

http://support.flir.com

Disclaimer

Specifications subject to change without further notice. Camera models and accessories subject to regional market considerations. License procedures may apply. Products described herein may be subject to US Export Regulations. Please refer to exportquestions@flir.com with any questions.

General description
The FLIR A310pt Pan & Tilt is an affordable solution for anyone who needs to solve problems that require built in “smartness” such as analysis and alarm functionality. The FLIR A310pt Pan & Tilt has all the necessary features and functions to build distributed single- or multi-camera solutions to cover large areas to monitor such as in coal pile monitoring and sub-station monitoring using standard Ethernet hardware and software protocols. The FLIR A310pt precision pan/tilt mechanism gives operators accurate pointing control while providing fully programmable scan patterns, radar slew-to-cue, and slew-to-alarm functionality. Multi-sensor configurations also include a day/night 36× zoom color CCD camera on the same pan/tilt package.
Key features:
• Built-in extensive analysis functionality. • Extensive alarm functionality, as a function of analysis and more. • H.264, MPEG-4, and MJPEG streaming. • Built-in web server. • 100 Mbps Ethernet (100 m cable, wireless, fiber, etc.). • Composite video output. • Precise pan/tilt mechanism. • Daylight camera. • IP66 rated. • IP control: FLIR PT series cameras can be integrated into any existing TCP/IP network and controlled using a personal computer. • Serial control interface, use Pelco D or Bosch commands over RS-232, RS-422, or RS-485 to remotely control the FLIR A310 pt. • Multi-camera software: FLIR Sensors Manager allows users to manage and control a FLIR PT series camera in a TCP/IP network.

Imaging and optical data	
IR resolution	320 × 240 pixels
Thermal sensitivity/NETD	< 0.05°C @ +30°C (+86°F) / 50 mK
Field of view (FOV)	90° × 73°
Minimum focus distance	20 mm (0.79 in.)
Focal length	4 mm (0.157 in.)
Spatial resolution (IFOV)	6.3 mrad
Lens identification	Automatic
F-number	1.3
Image frequency	9 Hz

FLIR A310pt 90° (9 Hz) NTSC

P/N: 60902-1105
© 2016, FLIR Systems, Inc.
#60902-1105; r. /35207; en-US

Imaging and optical data	
Focus	Automatic or manual (built in motor)
Zoom	1–8× continuous, digital, interpolating zooming on images

Detector data	
Detector type	Focal plane array (FPA), uncooled microbolometer
Spectral range	7.5–13 µm
Detector pitch	25 µm
Detector time constant	Typical 12 ms

Measurement	
Object temperature range	• –20 to +120°C (–4 to +248°F) • 0 to +350°C (+32 to +662°F)
Accuracy	±4°C (±7.2°F) or ±4% of reading

Measurement analysis	
Spotmeter	10
Area	10 boxes with max./min./average/position (7 if FLIR Sensors Manager is used)
Isotherm	1 with above/below/interval
Atmospheric transmission correction	Automatic, based on inputs for distance, atmospheric temperature and relative humidity
Optics transmission correction	Automatic, based on signals from internal sensors
Emissivity correction	Variable from 0.01 to 1.0
Reflected apparent temperature correction	Automatic, based on input of reflected temperature
External optics/windows correction	Automatic, based on input of optics/window transmission and temperature
Measurement corrections	Global and individual object parameters

Alarm	
Alarm functions	6 automatic alarms on any selected measurement function, camera temperature

Set-up	
Color palettes	Color palettes (BW, BW inv, Iron, Rain)
Set-up commands	Date/time, Temperature (°C/°F)

Imaging and optical data (visual camera)	
Field of view (FOV)	57.8° (H) to 1.7° (H)
Focal length	3.4 mm (wide) to 122.4 mm (tele)
F-number	1.6 to 4.5
Focus	Automatic or manual (built in motor)
Optical Zoom	36× continuous
Electronic Zoom	12× continuous, digital, interpolating

FLIR A310pt 90° (9 Hz) NTSC

P/N: 60902-1105
© 2016, FLIR Systems, Inc.
#60902-1105; r. /35207; en-US

Detector data (visual camera)	
Focal plane array (FPA)	1/4” Exview HAD CCD
Effective pixels	380.000

Technical specification (pan & tilt)	
Azimuth Range	Az velocity 360° continuous, 0.1 to 60°/sec max
Elevation Range	El velocity ± 45°, 0.1 to 30°/sec. max
Programmable presets	128
Automatic heaters	Clears window from ice. Switched on at +4°C (39°F). Switched off at +15°C (59°F).

Ethernet	
Ethernet	Control, result and image
Ethernet, type	100 Mbps
Ethernet, standard	IEEE 802.3
Ethernet, connector type	RJ-45
Ethernet, communication	
Ethernet, video streaming	Two independent channels for each camera - MPEG-4, H.264, or M-JPEG
Ethernet, protocols	TCP, UDP, SNTP, RTSP, RTP, HTTP, ICMP, IGMP, ftp, SMTP, SMB (CIFS), DHCP, MDNS (Bonjour), uPnP

Composite video	
Video out	Composite video output, NTSC compatible
Video, standard	CVBS (SMPTE 170M NTSC)

Power system	
Power	24 VAC (21-30 VAC; 24 VAC: 215 VA max. with heater) or 24 VDC (21-30 VDC; 24 VDC: 195 W max. with heater).

Environmental data	
Operating temperature range	–25°C to +50°C (-13°F to +122°F)
Storage temperature range	–40°C to +70°C (–40°F to +158°F)
Humidity (operating and storage)	IEC 60068-2-30/24 h 95% relative humidity +25° C to +40°C (+77°F to +104°F)
EMC	• EN 61000-6-2 (Immunity) • EN 61000-6-3 (Emission) • FCC 47 CFR Part 15 Class B (Emission)
Encapsulation	IP 66 (IEC 60529)
Bump	5 g, 11 ms (IEC 60068-2-27)
Vibration	2 g (IEC 60068-2-6)

Physical data	
Weight	18.1 kg (40.0 lb.)
Size (L × W × H)	460 × 467 × 326 mm (18.1 × 18.4 × 12.8 in.)

P/N: 60902-1105
© 2016, FLIR Systems, Inc.
#60902-1105; r. /35207; en-US

Physical data	
Base mounting	
Housing material	Aluminum

Shipping information	
Packaging, type	Cardboard box
List of contents	• Pan & tilt with infrared camera including lens and visual camera • FLIR Sensors Manager download card • Lens cap • Printed documentation • Small accessories kit
Packaging, weight	
Packaging, size	671 × 564 × 464 mm (26.4 × 22.2 × 18.3 in.)
EAN-13	7332558008973
UPC-12	845188009519
Country of origin	Sweden

Supplies & accessories:

- T197000; High temp. option +1200°C (+2192°F)
- 4119468; ADAPTER PLATE - PT-SERIES
- 223-0017-00; JOYSTICK ASSY, NEXUS CONSOLE
- 500-0461-00; PEDESTAL MOUNT ASSY - PT-SERIES
- 500-0509-00; POLE ADAPTER - PT-SERIES
- 4124857; POWER SUPPLY ASSY, 24VAC - PT-series
- 500-0460-00; WALL MOUNT ASSY - PT-SERIES
- 324-0010-00; Hard case - PT-SERIES
- 4130235; FLIR Sensors Manager, pro

This document must not be communicated or copied completely or in part, without our permission. Any infringement will lead to legal proceedings.
FLIR SYSTEMS AB

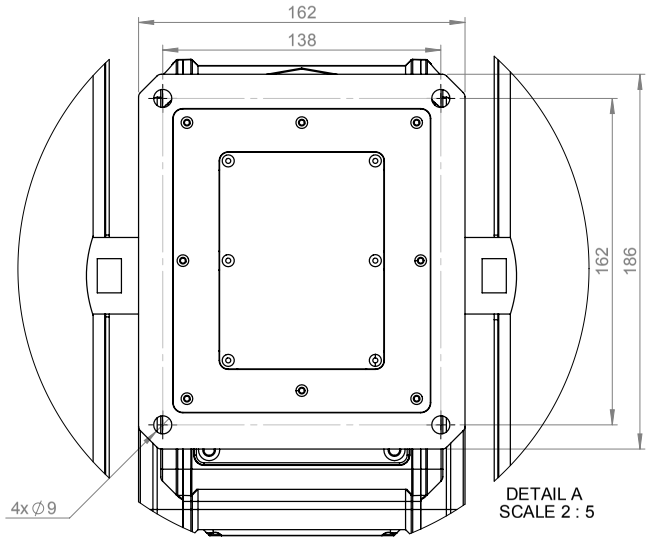

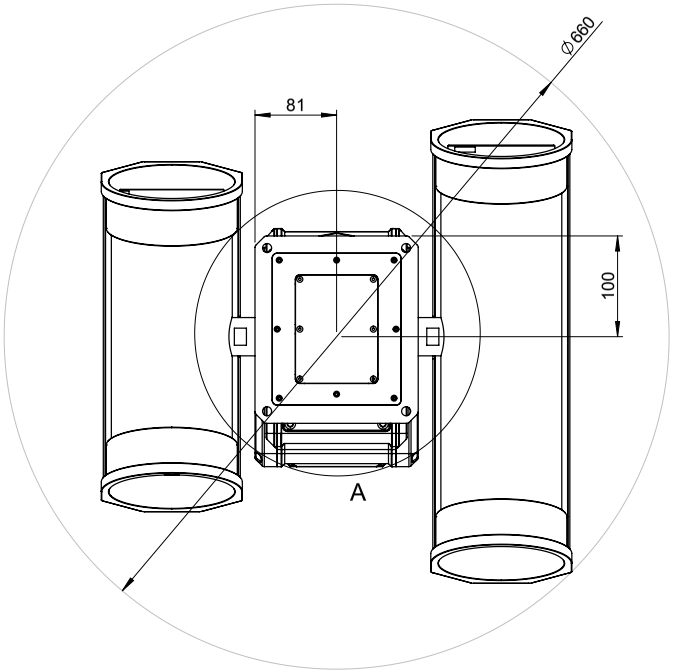

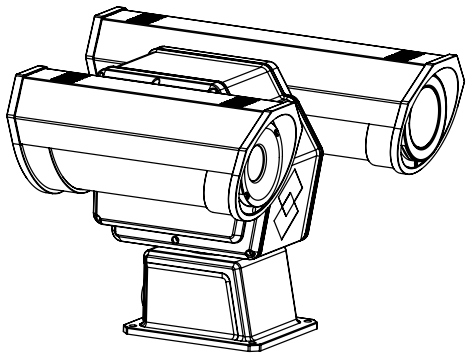

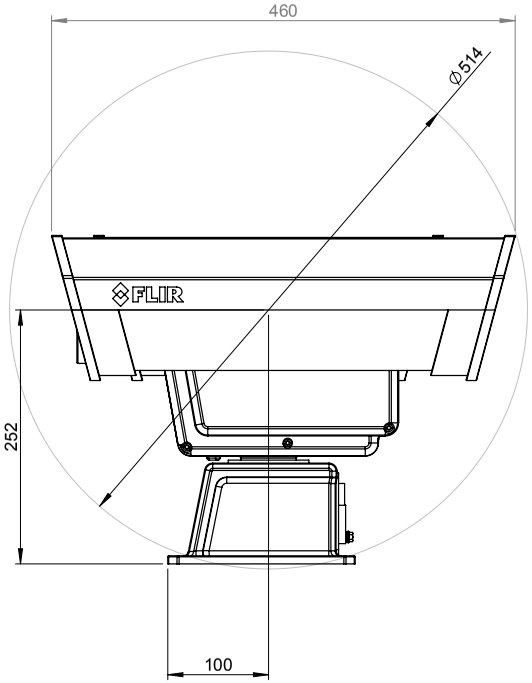

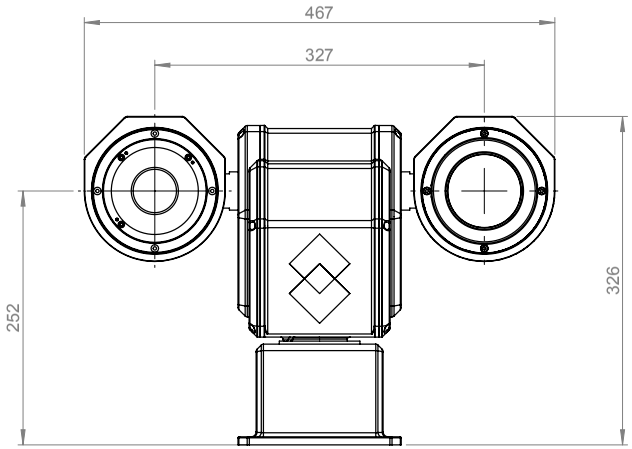

Konstr/Drawn: H. ÖSTLING	Datum/Date: 2011-10-31	Kontr/Check: ULGU	Material:
Ändrad av/Modified by: H. ÖSTLING	Ändrad/Modified: 2011-11-28	Ytjämnhet/Roughness: Ra - µm	Ytbehandling/Surface treatment: -

Där ej annat anges/Unless otherwise stated
Gen tol ISO 2768-mK
Utdrag ur/Excerpt from ISO 2768-m

0,5-6	±0,1	Hålkälsradier	-
(6)-30	±0,2	Fillet radii	
(30)-120	±0,3		
(120)-400	±0,5	Kanter brutna	-
(400)-1000	±0,8	Edges broken	

Benämning/Denomination

DIMENSIONAL DRAWING PT

Skala/Scale 1:5		Blad/Sheet 1(1)
ArtNo.		Size A3
Ritn nr/Drawing No T127400		Rev B

Denna handling får ej delges annan, kopieras i sin helhet eller delar utan vårt medgivande och innehållet får ej obehörigen bevisras med stöd av gällande lag.
FLIR SYSTEMS AB

Camera with built-in IR lens f=18 mm (25°)

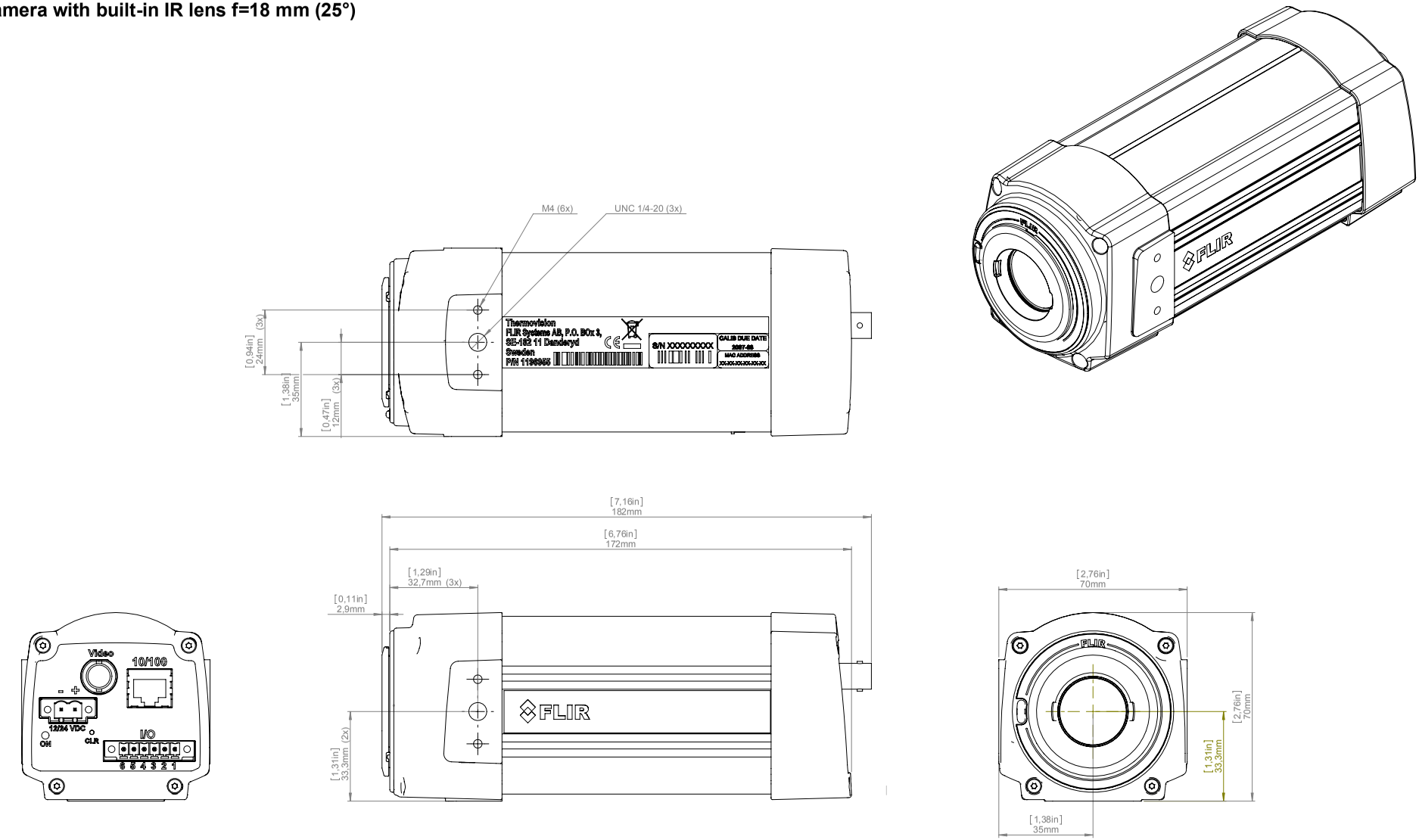

-

Modified	Check	Drawn by	
2012-04-18	CAHA	R&D Thermography	FLIR

Denomination

Basic dimensions FLIR A3xx/SC3xx

-

Size	Scale	Sheet
A3	1:1	1(8)

Drawing No.	Size
T125002	A

© 2012, FLIR Systems, Inc. All rights reserved worldwide. No part of this drawing may be reproduced, stored in a retrieval system, or transmitted in any form, or by any means, electronic, mechanical, photocopying, recording, or otherwise, without written permission from FLIR Systems, Inc. Specifications subject to change without further notice. Dimensional data is based on nominal values. Products may be subject to regional market considerations. License procedures may apply. Product may be subject to US Export Regulations. Please refer to exportquestions@flir.com with any questions. Diversion contrary to US law is prohibited.

Camera with Lens IR f=4 mm (90°) incl support

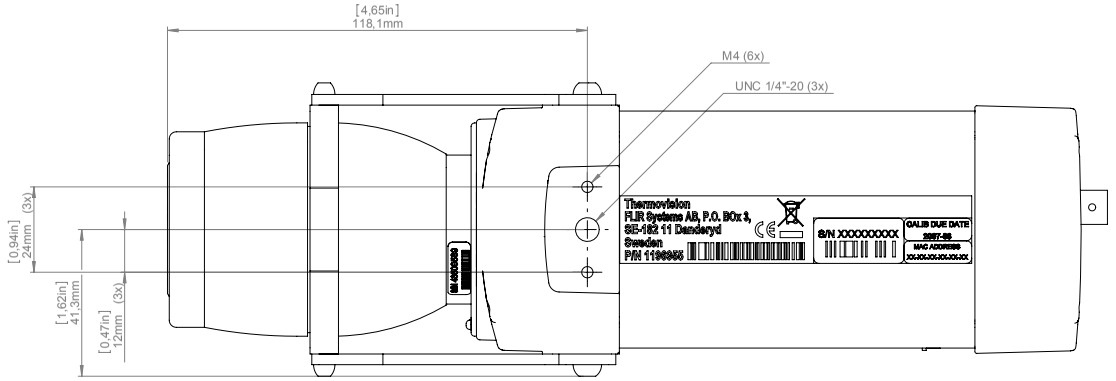

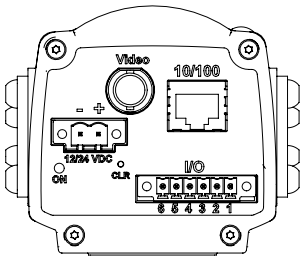

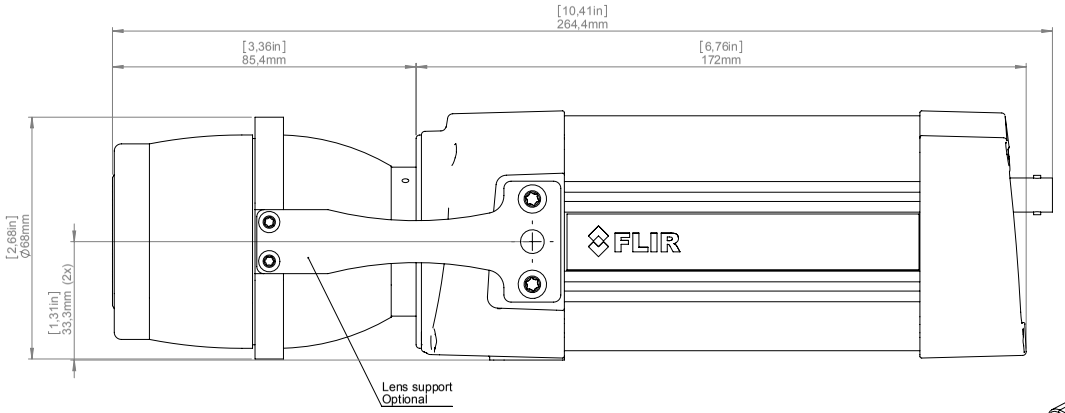

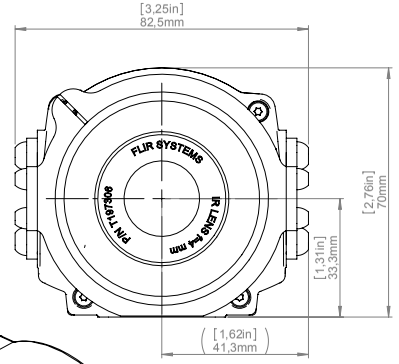

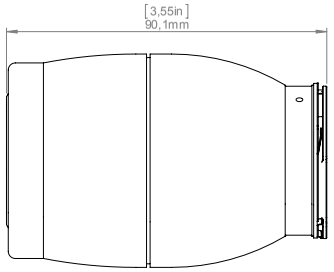

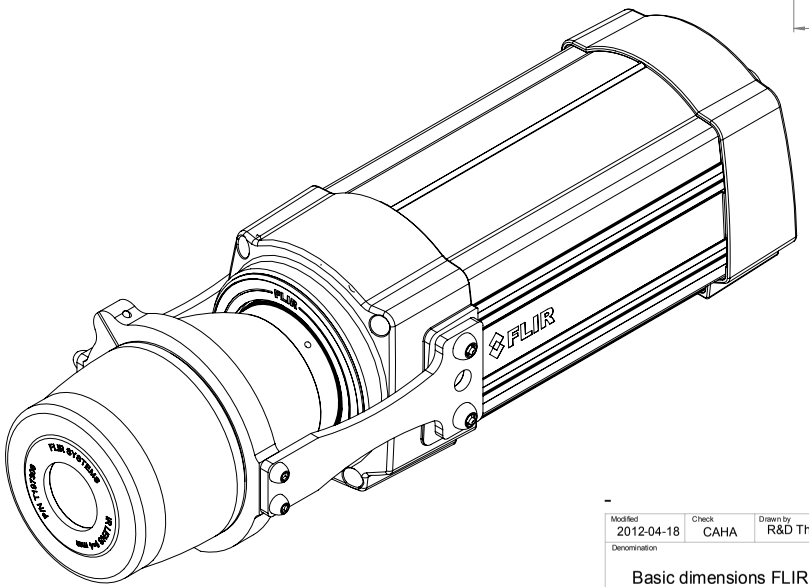

For additional dimensions see page 1

-

Modified	Check	Drawn by
2012-04-18	CAHA	R&D Thermography

Denomination

Basic dimensions FLIR A3xx/SC3xx

-

Size	Sheet
A3	2(8)
Scale 1:1	
Drawing No. T125002	Size A

© 2012, FLIR Systems, Inc. All rights reserved worldwide. No part of this drawing may be reproduced, stored in a retrieval system, or transmitted in any form, or by any means, electronic, mechanical, photocopying, recording, or otherwise, without prior written permission from FLIR Systems. Specifications subject to change without notice. Drawing and other design related data is provided "as is". Specifications and other information stated may not be applicable to all products. Product may be subject to regional market considerations. License procedures may apply. Product may be subject to US Export Regulations. Please refer to exportquestions@flir.com with any questions. Diversion contrary to US law is prohibited.

Camera with Lens IR f=10 mm (45°)

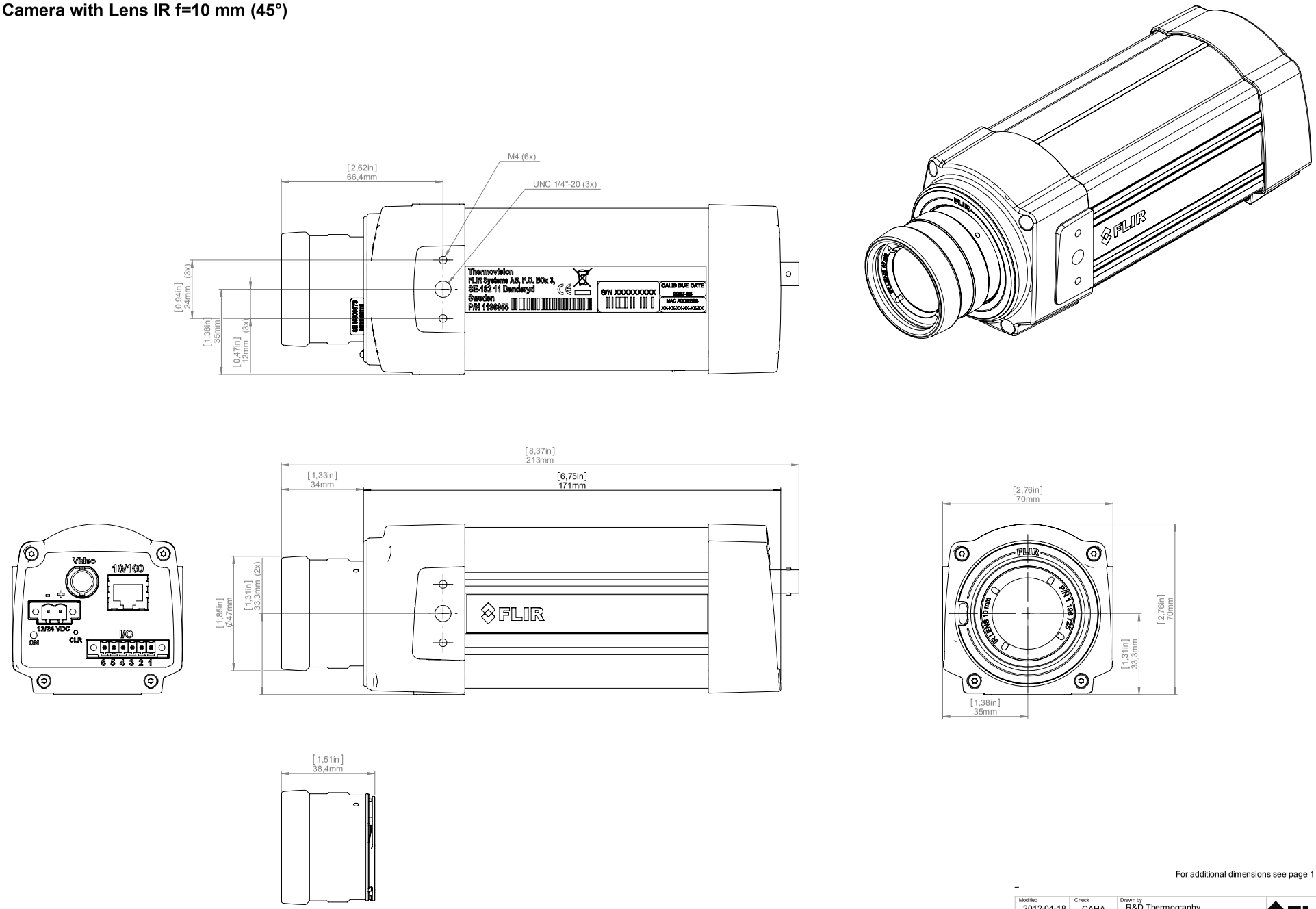

For additional dimensions see page 1

-

Modified	Check	Drawn by	
2012-04-18	CAHA	R&D Thermography	FLIR

Denomination

Basic dimensions FLIR A3xx/SC3xx

-

Size	Scale	Sheet
A3	1:1	3(8)

Drawing No.	Size
T125002	A

© 2012, FLIR Systems, Inc. All rights reserved worldwide. No part of this drawing may be reproduced, stored in a retrieval system, or transmitted in any form, or by any means, electronic, mechanical, photocopying, recording, or otherwise, without written permission from FLIR Systems, Inc. Specifications subject to change without further notice. Dimensions and data is based on nominal values. Products may be subject to regional market considerations. License procedures may apply. Product may be subject to US Export Regulations. Please refer to exportquestions@flir.com with any questions. Diversion contrary to US law is prohibited.

Camera with Lens IR f=30 mm (15°)

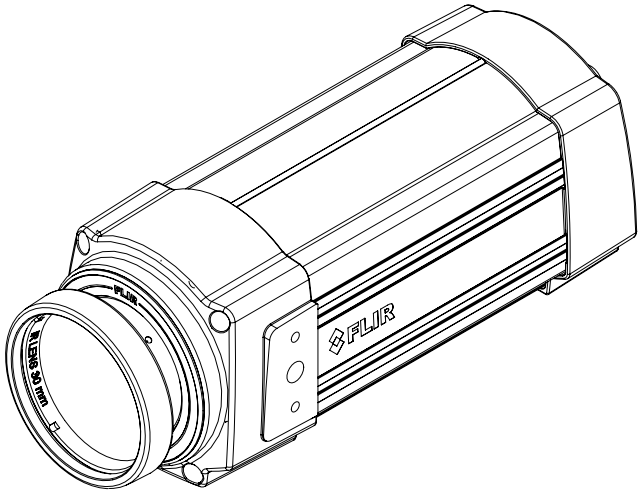

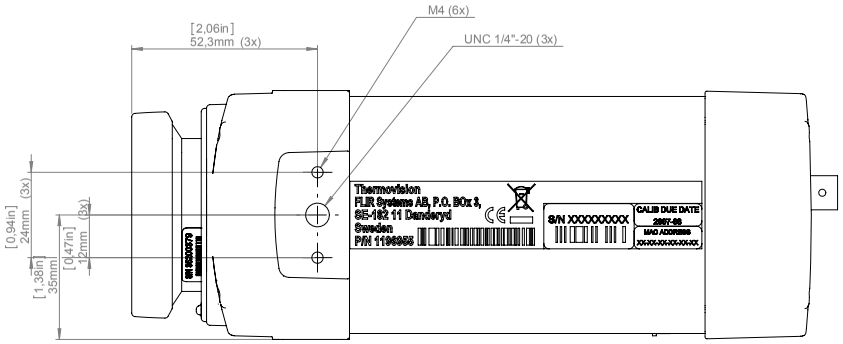

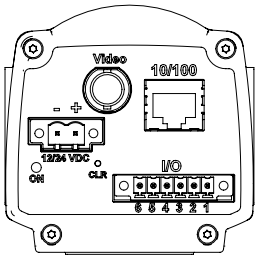

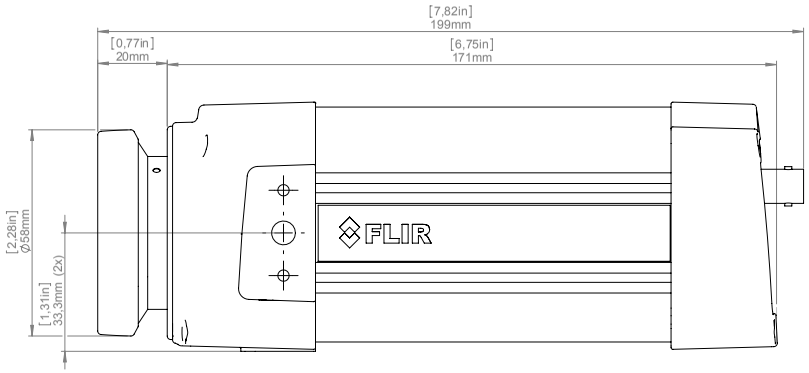

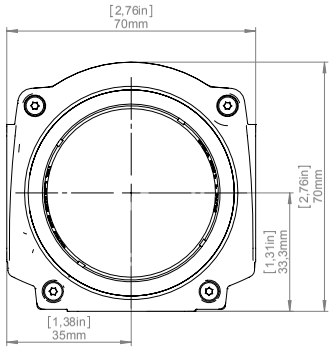

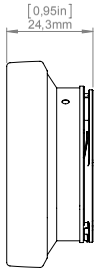

For additional dimensions see page 1

-

Modified	Check	Drawn by	
2012-04-18	CAHA	R&D Thermography	FLIR

Denomination

Basic dimensions FLIR A3xx/SC3xx

-

Size	Sheet
A3	4(8)
Scale 1:1	
Drawing No. T125002	Size A

© 2012, FLIR Systems, Inc. All rights reserved worldwide. No part of this drawing may be reproduced, stored in a retrieval system, or transmitted in any form, or by any means, electronic, mechanical, photocopying, recording, or otherwise, without prior written permission of FLIR Systems, Inc. Software embodied in the described products is furnished under a license and may be used or copied only in accordance with the terms of such license. Product may be subject to US Export Regulations. Please refer to exportquestions@flir.com with any questions. Diversion contrary to US law is prohibited.

Camera with Lens IR f=76 mm (6°) incl support

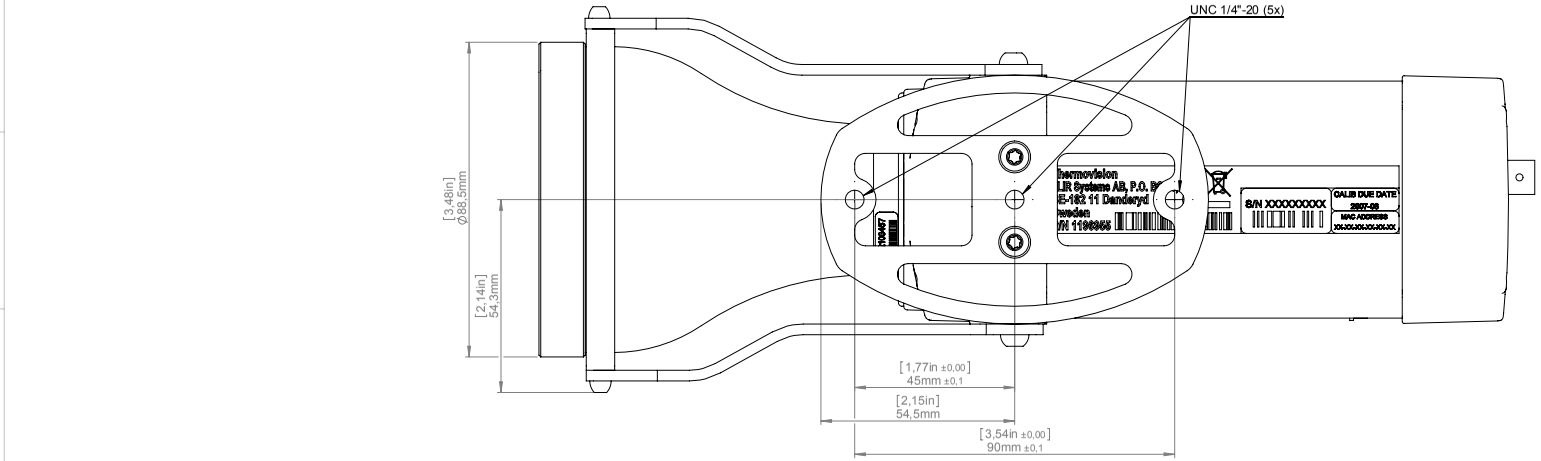

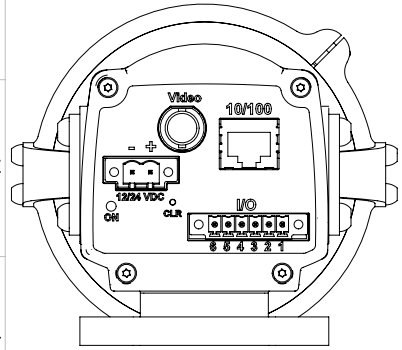

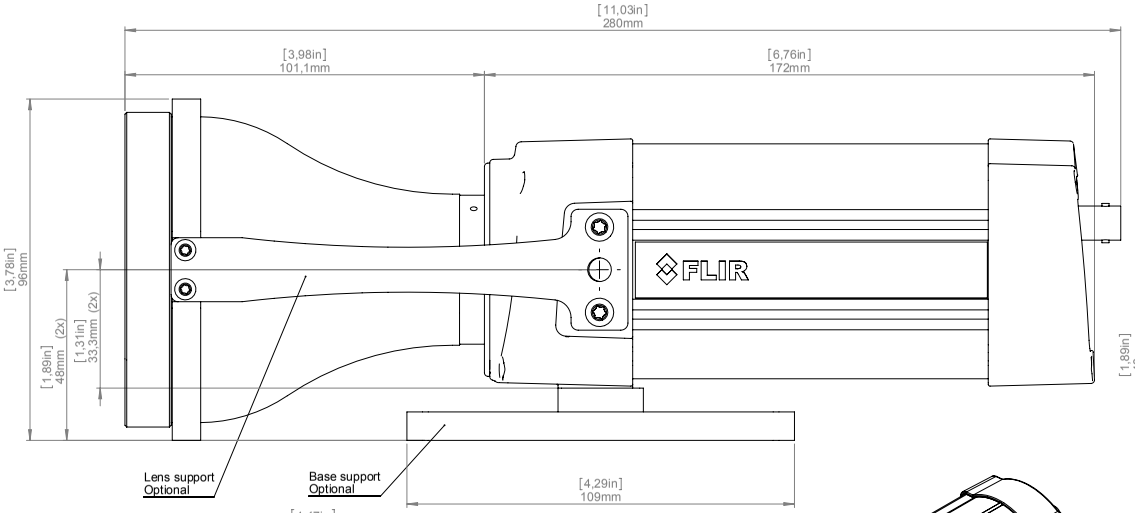

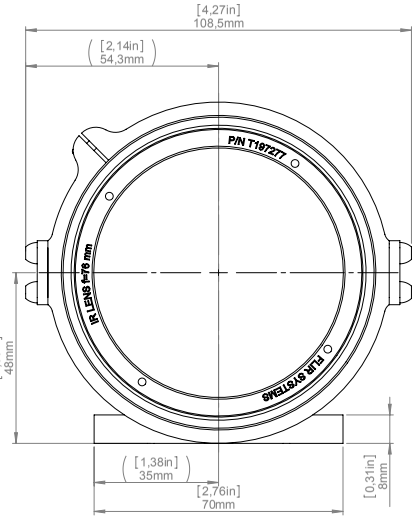

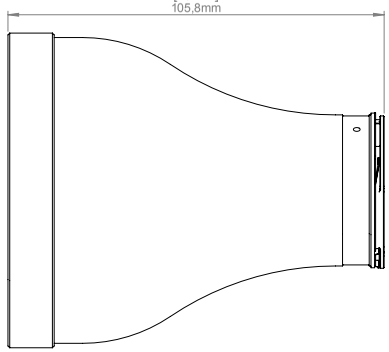

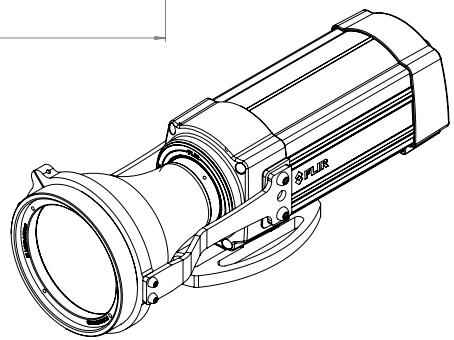

For additional dimensions see page 1

-

Modified	Check	Drawn by
2012-04-18	CAHA	R&D Thermography

Denomination

Basic dimensions FLIR A3xx/SC3xx

-

Size	Sheet
A3	5(8)

Scale 1:1

Drawing No.	Size
T125002	A

© 2012, FLIR Systems, Inc. All rights reserved worldwide. No part of this drawing may be reproduced, stored in a retrieval system, or transmitted in any form, or by any means, electronic, mechanical, photocopying, recording, or otherwise, without prior written permission of FLIR Systems, Inc. Software in this product is subject to a license agreement and non-disclosure agreement. It is the customer's responsibility to comply with these agreements. This drawing is supplied for information purposes only, and is valid at the time of printing. For the most up-to-date information please visit www.flir.com. Products may be subject to regional market considerations. License procedures may apply. Product may be subject to US Export Regulations. Please refer to exportquestions@flir.com with any questions. Diversion contrary to US law is prohibited.

Camera with Close-up lens 1X (25 µm) incl support

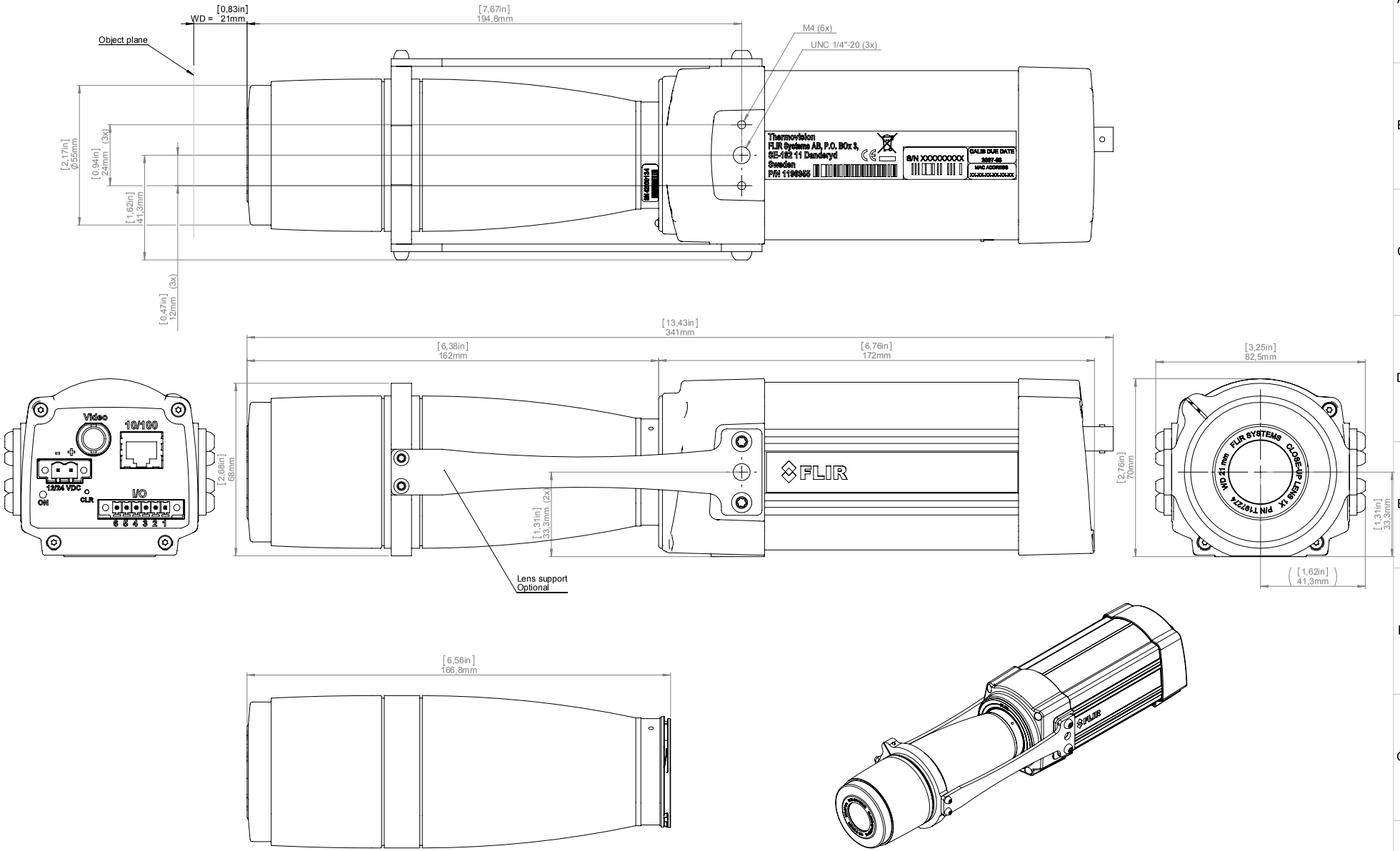

For additional dimensions see page 1

-

Modified	Check	Drawn by	
2012-04-18	CAHA	R&D Thermography	FLIR

Denomination

Basic dimensions FLIR A3xx/SC3xx

-

Size	Scale	Sheet
A3	1:1	6(8)

Drawing No.	Size
T125002	A

© 2012, FLIR Systems, Inc. All rights reserved worldwide. No part of this drawing may be reproduced, stored in a retrieval system, or transmitted in any form, or by any means, electronic, mechanical, photocopying, recording, or otherwise, without written permission from FLIR Systems, Inc. Specifications subject to change without further notice. Dimensional data is based on nominal values. Products may be subject to regional market considerations. License procedures may apply. Product may be subject to US Export Regulations. Please refer to exportquestions@flir.com with any questions. Diversion contrary to US law is prohibited.

Camera with Close-up lens 2X (50 µm)

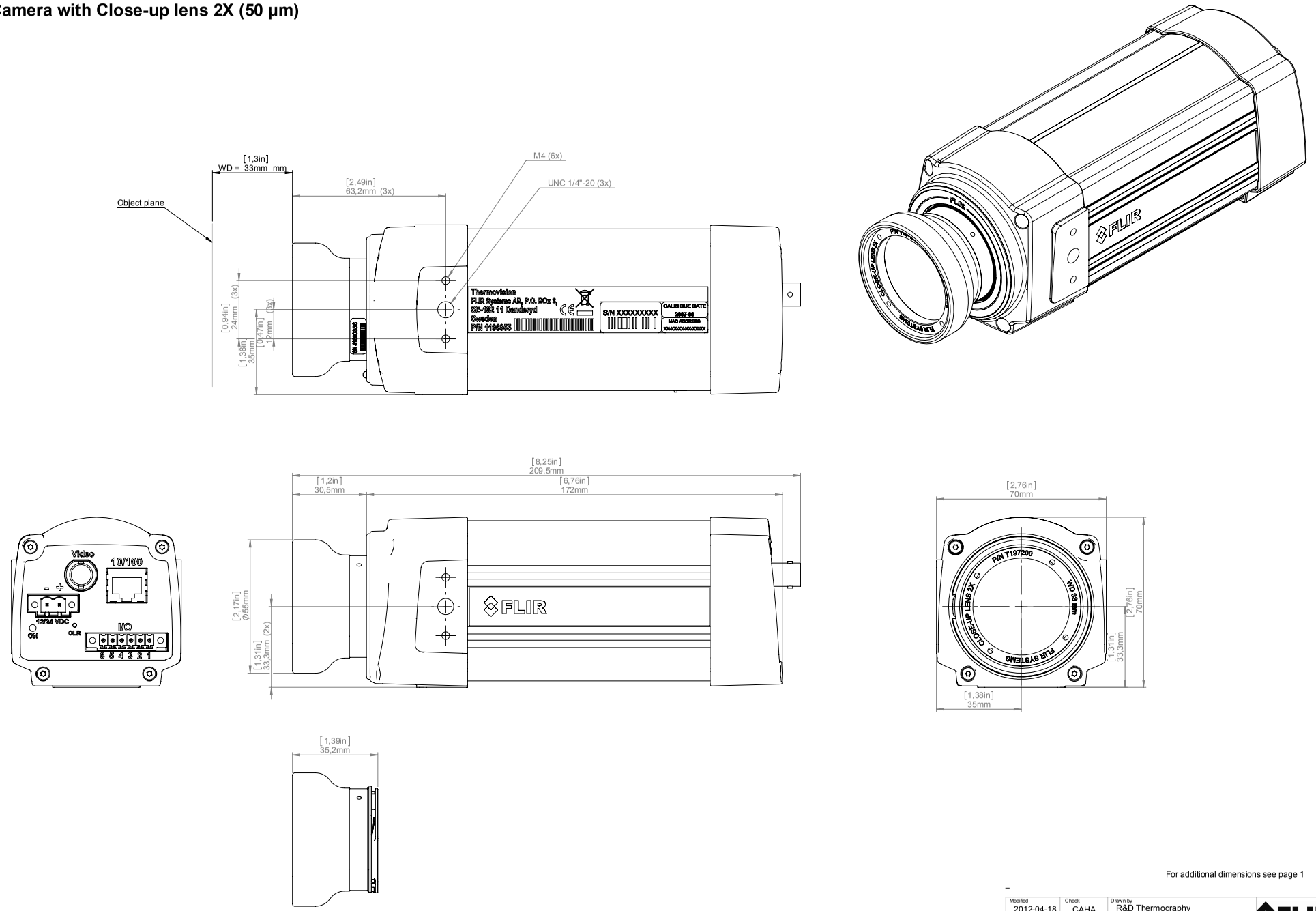

For additional dimensions see page 1

-

Modified	Check	Drawn by	
2012-04-18	CAHA	R&D Thermography	FLIR

Denomination

Basic dimensions FLIR A3xx/SC3xx

-

Size	Scale	Sheet
A3	1:1	7(8)

Drawing No.	Size
T125002	A

© 2012, FLIR Systems, Inc. All rights reserved worldwide. No part of this drawing may be reproduced, stored in a retrieval system, or transmitted in any form, or by any means, electronic, mechanical, photocopying, recording, or otherwise, without written permission from FLIR Systems, Inc. Specifications subject to change without further notice. Dimensional data is based on nominal values. Products may be subject to regional market considerations. License procedures may apply. Product may be subject to US Export Regulations. Please refer to exportquestions@flir.com with any questions. Diversion contrary to US law is prohibited.

Camera with Close-up lens 4X (100 µm)

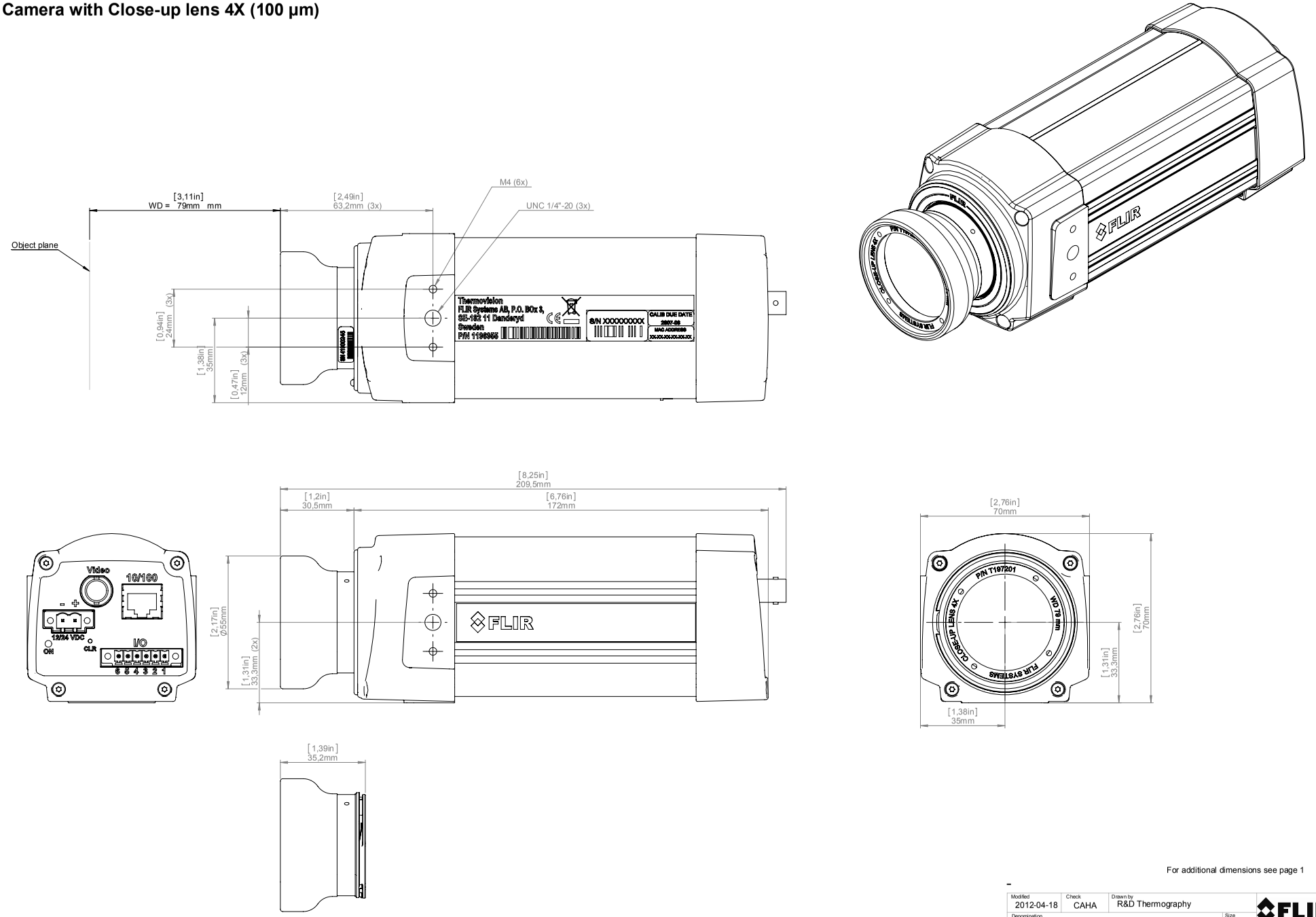

For additional dimensions see page 1

-

Modified	Check	Drawn by	
2012-04-18	CAHA	R&D Thermography	FLIR

Denomination

Basic dimensions FLIR A3xx/SC3xx

-

Size	Scale	Sheet
A3	1:1	8(8)

Drawing No.	Size
T125002	A

© 2012, FLIR Systems, Inc. All rights reserved worldwide. No part of this drawing may be reproduced, stored in a retrieval system, or transmitted in any form, or by any means, electronic, mechanical, photocopying, recording, or otherwise, without written permission from FLIR Systems, Inc. Specifications subject to change without further notice. Dimensional data is based on nominal values. Products may be subject to regional market considerations. License procedures may apply. Product may be subject to US Export Regulations. Please refer to exportquestions@flir.com with any questions. Diversion contrary to US law is prohibited.

April 22, 2013 AQ320022

CE Declaration of Conformity

This is to certify that the System listed below have been designed and manufactured to meet the requirements, as applicable, of the following EU-Directives and corresponding harmonising standards. The systems consequently meet the requirements for the CE-mark.

Directives:

Directive 2004/108/EC; Electromagnetic Compatibility

Standards:

Emission:	**EN 61000-6-4;**	**Electro magnetic Compatibility Generic standards - Emission**
Immunity:	**EN 61000-6-2;**	**Electro magnetic Compatibility; Generic standards - Immunity**

System: **FLIR A310pt series**

FLIR Systems AB
Quality Assurance

Björn Svensson
Director