FLIR T660 25° and 45° w/case

P/N: 55904-8525

Copyright

© 2017, FLIR Systems, Inc.

All rights reserved worldwide. Names and marks appearing herein are either registered trademarks or trademarks of FLIR Systems and/or its subsidiaries. All other trademarks, trade names or company names referenced herein are used for identification only and are the property of their respective owners.

Document identity

Publ. No.: 55904-8525
Release:
Commit: 35954
Language: en-US
Modified: 2016-05-30
Formatted: 2017-02-25

Website

http://www.flir.com

Customer support

http://support.flir.com

Disclaimer

Specifications subject to change without further notice. Camera models and accessories subject to regional market considerations. License procedures may apply. Products described herein may be subject to US Export Regulations. Please refer to exportquestions@flir.com with any questions.

General description
The FLIR T660 is designed for the expert requiring the highest performance and the latest technology available. The camera combines excellent ergonomics and a walk-up-and-use interface with superior image quality of 640 × 480 pixel infrared resolution. The FLIR T660 is flexible and can meet your every need.
Benefits:
• Highest performance with the latest technology: The FLIR T660 is equipped with the innovative Multi Spectral Dynamic Imaging (MSX) feature, which produces an image richer in detail than ever before. Continuous auto-focus makes the FLIR T660 the first fully automatic infrared camera on the market. • Ground-breaking efficiency: You can highlight objects of interest, on both the infrared and the visual images, by sketching or adding predefined stamps directly onto the camera's capacitive touch screen. The user interface is intuitive and logical for effective operation. Auto-orientation allows you to tilt between landscape and portrait views. • Extensive communication options: The Wi-Fi connectivity of the FLIR T640 allows you to connect to smart phones or tablets for the wireless transfer of images or the remote control of the camera. The Bluetooth-based METERLiNK function transfers readings from external measurement instruments to the infrared image. • Support for UltraMax: When enabling UltraMax in the camera, the resolution of images can be substantially enhanced when importing the images into FLIR Tools.

Imaging and optical data	
IR resolution	640 × 480 pixels
UltraMax	Yes
Thermal sensitivity/NETD	<20 mK @ +30°C (+86°F)
Field of view (FOV)	25° × 19°
Minimum focus distance	0.25 m (0.82 ft.)
Focal length	25 mm (0.97 in.)
Spatial resolution (IFOV)	0.68 mrad
Lens identification	Automatic
F-number	1.0
Image frequency	30 Hz
Focus	Continuous, one shot or manual
Digital zoom	1–8× continuous
Digital image enhancement	Adaptive digital noise reduction

FLIR T660 25° and 45° w/case

P/N: 55904-8525
© 2017, FLIR Systems, Inc.
#55904-8525; r. /35954; en-US

Detector data	
Detector type	Focal plane array (FPA), uncooled microbolometer
Spectral range	7.5–14 µm
Detector pitch	17 µm

Image presentation	
Display	Built-in touch screen, 4.3 in. wide screen LCD, 800 × 480 pixels
Display type	Capacitive touch screen
Auto orientation	Automatic landscape or portrait
Viewfinder	Built-in 800 × 480 pixels
Automatic image adjustment	Continuous, histogram based
Manual image adjustment	Linear based; possible to adjust level/span/max./min.

Image presentation modes	
Infrared image	Full-color IR image
Visual image	Full color visual image
Thermal MSX	Thermal image with enhanced detail presentation
Picture in Picture	Resizable and movable IR area on visual image

Measurement	
Object temperature range	• –40°C to +150°C (–40°F to +302°F) • +100°C to +650°C (+212°F to +1202°F) • +300°C to +2000°C (+572°F to +3632°F)
Accuracy	• ±1°C (±1.8°F) or ±1% of reading for limited temperature range. • ±2°C (±3.6°F) or 2%, whichever is greater, at 25°C (77°F) nominal.

Measurement analysis	
Spotmeter	10
Area	5 + 5 areas (boxes or circles) with max./min./average (in post-acquisition analysis)
Profile	1 line profile with max/min temp
Automatic hot/cold detection	Auto hot or cold spotmeter markers within area and profile
Measurement presets	No measurements, Center spot, Hot spot, Cold spot, User preset 1, User preset 2
User presets (in live images)	The user can select and combine measurements from any number of available spots/boxes/circles/profiles/delta
Difference temperature	Delta temperature between measurement functions or reference temperature
Reference temperature	Manually set using difference temperature
Atmospheric transmission correction	Automatic, based on inputs for distance, atmospheric temperature and relative humidity

FLIR T660 25° and 45° w/case

P/N: 55904-8525
© 2017, FLIR Systems, Inc.
#55904-8525; r. /35954; en-US

Measurement analysis	
Optics transmission correction	Automatic, based on signals from internal sensors
Emissivity correction	Variable from 0.01 to 1.0 or selected from materials list
Emissivity table	Emissivity table of predefined materials
Reflected apparent temperature correction	Automatic, based on input of reflected temperature
External optics/windows correction	Automatic, based on inputs of window transmission and temperature
Measurement corrections	Emissivity, reflected temperature, relative humidity, atmospheric temperature, object distance, external IR window compensation
Colors (palettes)	Iron, Rainbow, Rainbow HC, White hot, Black hot, Arctic, Lava

Alarm	
Color Alarm (isotherm)	Above/below/interval
Measurement function alarm	Audible/visual alarms (above/below) on any selected measurement function
Screening	Difference temperature alarm, audible

Set-up	
Set-up commands	Define user presets, Save options, Programmable button, Reset options, Set up camera, Wi-Fi, GPS & compass, Bluetooth, Language, Time & units, Camera information

Service functions	
Camera software update	Use PC software FLIR Tools

Storage of images	
Image storage	Standard JPEG, including digital photo and measurement data, on memory card
Storage media	Removable memory SD card
Image storage mode	• Simultaneous storage of thermal and digital photo in same JPEG file. • Optional to store digital photo as a separate JPEG file.
Time lapse	15 seconds to 24 hours
File formats	Standard JPEG, measurement data included
File formats, visual	Standard JPEG, automatically associated with corresponding thermal image

Image annotations (in still images)	
Voice	60 seconds (via Bluetooth) stored with the image
Text	Add table. Select between predefined templates or create your own in FLIR Tools
Image description	Add short note (stored in JPEG EXIF tag)
Sketch	Draw on thermal/digital photo or add predefined stamps

FLIR T660 25° and 45° w/case

P/N: 55904-8525
© 2017, FLIR Systems, Inc.
#55904-8525; r. /35954; en-US

Image annotations (in still images)	
METERLiNK	Wireless connection (Bluetooth) to: FLIR meters with METERLiNK
Report generation	• Instant Report (*.pdf file) in camera • Separate PC software with extensive report generation

Geographic Information System	
GPS	Location data automatically added to every still image from built-in GPS
Compass	Camera direction automatically added to every still image

Video recording in camera	
Radiometric IR video recording	CSQ to memory card
Non-radiometric IR video recording	MPEG-4 to memory card
Visual video recording	MPEG-4 to memory card

Video streaming	
Radiometric IR video streaming	Full dynamic to PC using USB or to mobile devices using Wi-Fi.
Non-radiometric IR video streaming	• MPEG-4 using Wi-Fi • Uncompressed colorized video using USB
Visual video streaming	• MPEG-4 using Wi-Fi • Uncompressed colorized video using USB

Digital camera	
Built-in digital camera	5 Mpixels with LED light (photo as separate image)
Digital camera, FOV	Adapts to the IR lens
Video lamp	Built-in LED light

Laser pointer	
Laser	Activated by dedicated button
Laser alignment	Position is automatic displayed on the IR image
Laser classification	Class 2
Laser type	Semiconductor AlGaInP diode laser, 1 mW, 635 nm (red)

Data communication interfaces	
Interfaces	USB-mini, USB-A, Bluetooth, Wi-Fi, Digital Video Output
METERLiNK/Bluetooth	Communication with headset and external sensors
Wi-Fi	Peer to peer (ad hoc) or infrastructure (network)
SD Card	One card slot for removable SD memory cards

FLIR T660 25° and 45° w/case

P/N: 55904-8525
© 2017, FLIR Systems, Inc.
#55904-8525; r. /35954; en-US

USB	
USB	• USB-A: Connect external USB device • USB Mini-B: Data transfer to and from PC / uncompressed colorized video
USB, standard	USB 2.0 high speed

Video output	
Video out	Digital video output (DVI)
Video, connector type	HDMI compatible

Radio	
Wi-Fi	• Standard: 802.11 b/g • Frequency range: 2412–2462 MHz • Max. output power: 15 dBm
METERLiNK/Bluetooth	Frequency range: 2402–2480 MHz
Antenna	Internal

Power system	
Battery type	Rechargeable Li ion battery
Battery operating time	> 2.5 hours at 25°C (+68°F) and typical use
Charging system	In camera (AC adapter or 12 V from a vehicle) or 2-bay charger
Charging time	2.5 h to 90 % capacity, charging status indicated by LED's
Charging temperature	0°C to +45°C (+32°F to +113°F)
External power operation	AC adapter 90–260 VAC, 50/60 Hz or 12 V from a vehicle (cable with standard plug, optional)

Environmental data	
Operating temperature range	–15°C to +50°C (+5°F to +122°F)
Storage temperature range	–40°C to +70°C (–40°F to +158°F)
Humidity (operating and storage)	IEC 60068-2-30/24 h 95% relative humidity +25° C to +40°C (+77°F to +104°F) / 2 cycles
EMC	• ETSI EN 301 489-1 (radio) • ETSI EN 301 489-17 • EN 61000-6-2 (Immunity) • EN 61000-6-3 (Emission) • FCC 47 CFR Part 15 Class B (Emission) • ICES-003
Radio spectrum	• ETSI EN 300 328 • FCC Part 15.247 • RSS-210
Encapsulation	IP 54 (IEC 60529)
Shock	25 g (IEC 60068-2-27)
Vibration	2 g (IEC 60068-2-6)
Safety	EN/UL/CSA/PSE 60950-1

FLIR T660 25° and 45° w/case

P/N: 55904-8525
© 2017, FLIR Systems, Inc.
#55904-8525; r. /35954; en-US

Physical data	
Weight	1.3 kg (2.87 lb.)
Camera size, excl. lens (L × W × H)	143 × 195 × 95 mm (5.6 × 7.7 × 3.7 in.)
Tripod mounting	UNC ¼"-20
Housing material	Magnesium

Shipping information	
Packaging, type	Cardboard box
List of contents	• Infrared camera with lens • Battery (2 ea.) • Battery charger • Bluetooth headset • Calibration certificate • HDMI-DVI cable • HDMI-HDMI cable • Hard transport case • IR lens, f=13.1 mm (45°) with case • Large eyecap • Lens cap • Memory card • Neck strap • Power supply, incl. multi-plugs • Printed documentation • Tripod adapter • USB cable, Std A to Mini-B
EAN-13	7332558012109
UPC-12	845188013202
Country of origin	Sweden

Supplies & accessories:

- T197914; IR lens, f=41.3 mm (15°) with case
- T197922; IR lens, f=24.6 mm (25°) with case
- T197915; IR lens, f=13.1 mm (45°) with case
- T198059; Close-up IR lens, 2.9× (50 µm) with case
- T198060; Close-up IR lens, 5.8× (100 µm) with case
- T198166; IR lens, f=88.9 mm (7°) with case and support for T6xx
- T198065; IR lens, f=6.5 mm (80°) with case
- T198066; Close-up IR lens, 1.5× (25 µm) with case
- T197896; High temperature option +300°C to 2000°C (+572°F to 3632°F)
- T910814; Power supply, incl. multi plugs
- T198126; Battery charger, incl. power supply with multi plugs T6xx
- T198506; Li-Ion Battery pack 3.7V 29Wh
- T199406ACC; Battery Li-ion 3.7 V, 7.8 Ah, 29 Wh
- T911650ACC; Memory card SD Card 8 GB
- 1910423; USB cable Std A <-> Mini-B
- T198509; Cigarette lighter adapter kit, 12 VDC, 1.2 m/3.9 ft.
- T910930ACC; HDMI type C to DVI cable 1.5 m
- T910891ACC; HDMI type C to HDMI type A cable 1.5 m
- T198625ACC; Hard transport case
- T198495; Pouch for FLIR T6xx and T4xx series
- T198497; Large eyecup
- T198498; Tripod Adapter
- T198499; Neck strap
- T197771ACC; Bluetooth Headset

FLIR T660 25° and 45° w/case

P/N: 55904-8525
© 2017, FLIR Systems, Inc.
#55904-8525; r. /35954; en-US

- T911093; Tool belt
- 19250-100; IR Window 2 in
- 19251-100; IR Window 3 in.
- 19252-100; IR Window 4 in.
- 19250-200; SS IR Window 2 in.
- 19251-200; SS IR Window 3 in.
- 19252-200; SS IR Window 4 in.
- T198496; Stylus pen
- T198586; FLIR Reporter Professional (license only)
- T198584; FLIR Tools
- T198583; FLIR Tools+ (download card incl. license key)
- DSW-10000; FLIR IR Camera Player
- APP-10002; FLIR Tools Mobile (Android Application)
- APP-10004; FLIR Tools (MacOS Application)
- T199233; FLIR Atlas SDK for .NET
- T199234; FLIR Atlas SDK for MATLAB

Camera housing

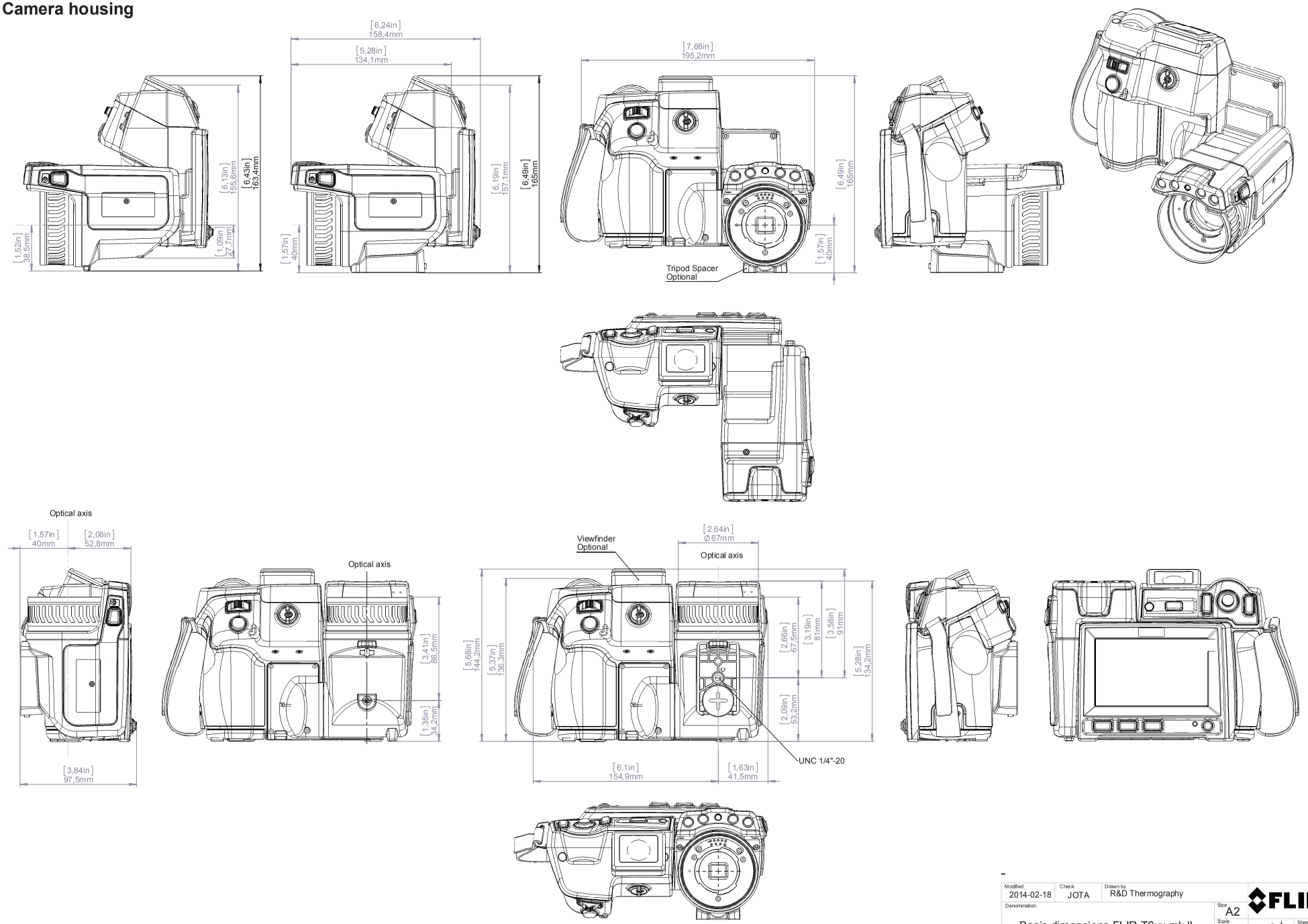

Modified	Check	Drawn by	
2014-02-18	JOTA	R&D Thermography	FLIR
Denomination		Size A2	
Basic dimensions FLIR T6xx mk II		Scale 1:2	Sheet 1(9)
		Drawing No. T128123	Size A

© 2012, FLIR Systems, Inc. All rights reserved worldwide. No part of this drawing may be reproduced, stored in a retrieval system, or transmitted in any form, or by any means, electronic, mechanical, photocopying, recording, or otherwise, without written permission from FLIR Systems, Inc. Specifications subject to change without further notice. Dimensional data is based on nominal values. Products may be subject to regional market considerations. License procedures may apply. Product may be subject to US Export Regulations. Please refer to exportquestions@flir.com with any questions. Diversion contrary to US law is prohibited.

Camera with Lens IR f=6,5 mm (80°)

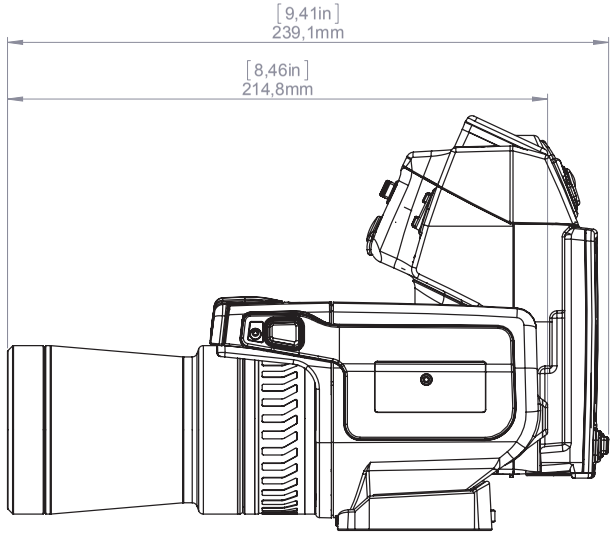

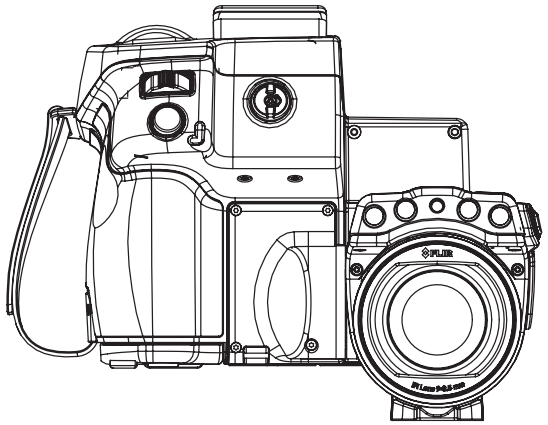

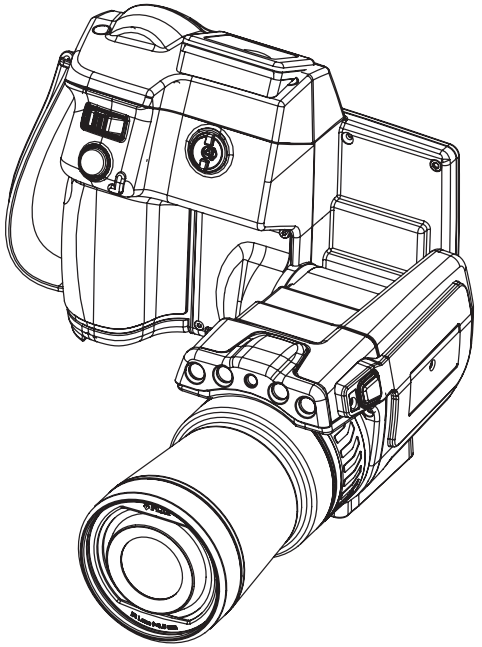

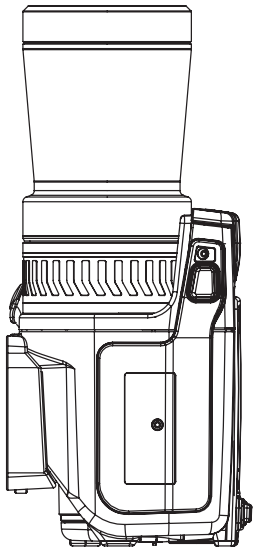

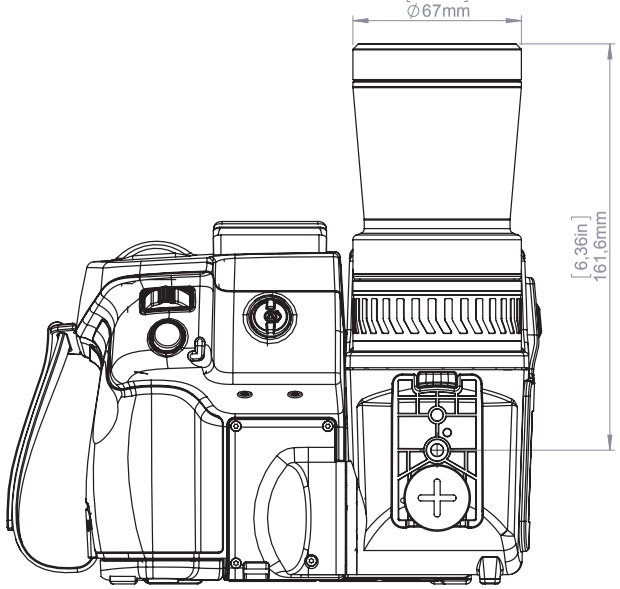

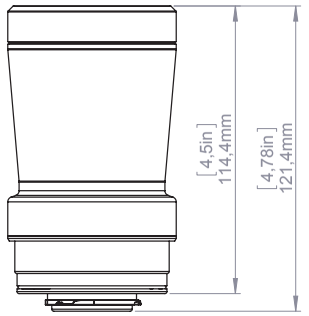

For additional dimensions see page 1

Modified	Check	Drawn by
2014-02-18	JOTA	R&D Thermography

Denomination

Basic dimensions FLIR T6xx mk II

Size	Sheet
A3	2(9)
Scale 1:2	
Drawing No. T128123	Size A

© 2012, FLIR Systems, Inc. All rights reserved worldwide. No part of this drawing may be reproduced, stored in a retrieval system, or transmitted in any form, or by any means, electronic, mechanical, photocopying, recording, or otherwise, without written permission from FLIR Systems, Inc. Specifications subject to change without further notice. Dimensional data is based on nominal values. Products may be subject to regional market considerations. License procedures may apply. Product may be subject to US Export Regulations. Please refer to exportquestions@flir.com with any questions. Diversion contrary to US law is prohibited.

Camera with Lens IR f=13,1 mm (45°)

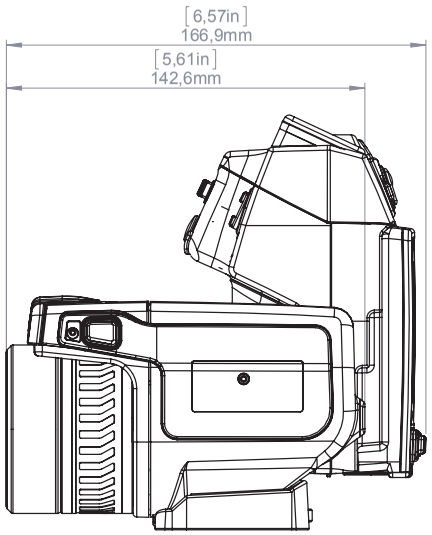

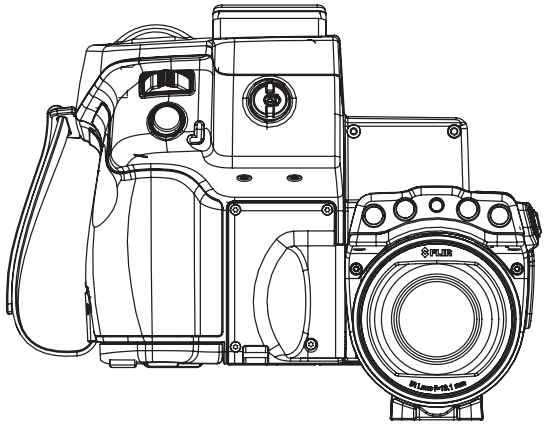

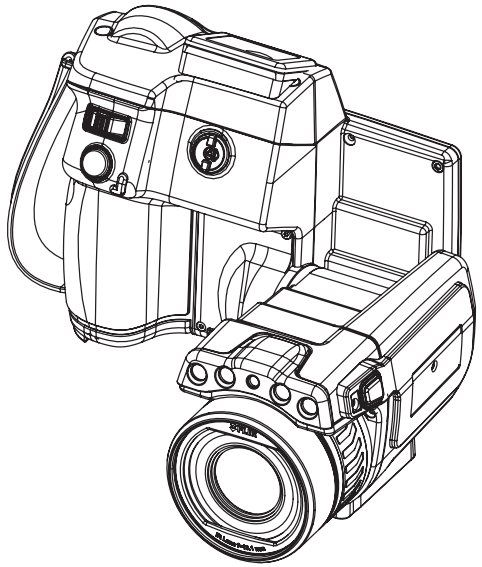

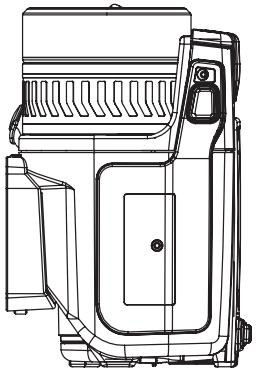

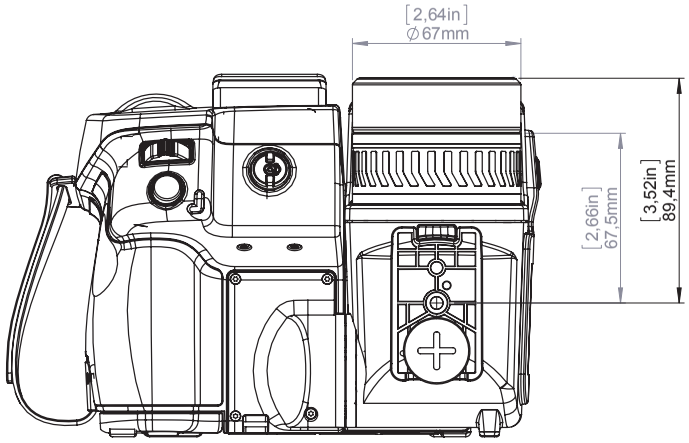

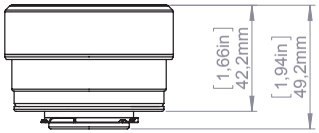

For additional dimensions see page 1

Modified	Check	Drawn by
2014-02-18	JOTA	R&D Thermography

Denomination

Basic dimensions FLIR T6xx mk II

Size	Sheet
A3	3(9)
Scale 1:2	
Drawing No. T128123	Size A

© 2012, FLIR Systems, Inc. All rights reserved worldwide. No part of this drawing may be reproduced, stored in a retrieval system, or transmitted in any form, or by any means, electronic, mechanical, photocopying, recording, or otherwise, without written permission from FLIR Systems, Inc. Specifications subject to change without further notice. Dimensional data is based on nominal values. Products may be subject to regional market considerations. License procedures may apply. Product may be subject to US Export Regulations. Please refer to exportquestions@flir.com with any questions. Diversion contrary to US law is prohibited.

Camera with Lens IR f=24,6 mm (25°)

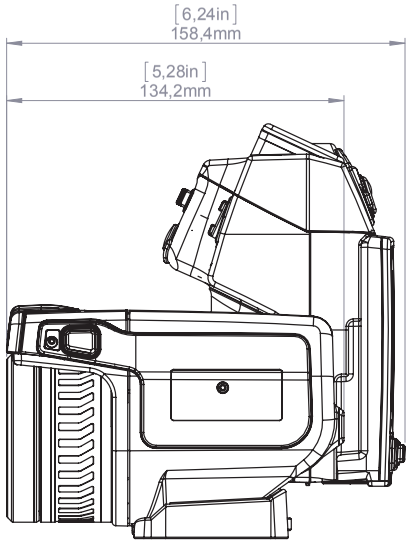

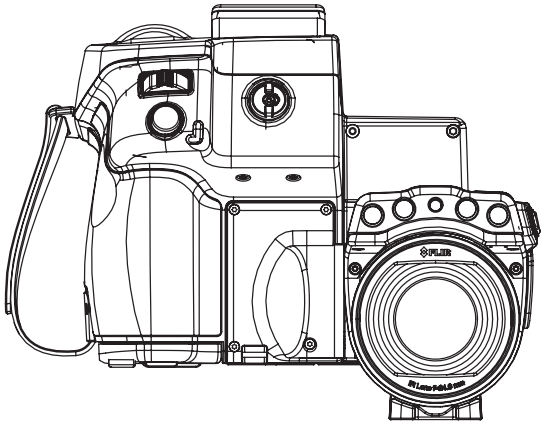

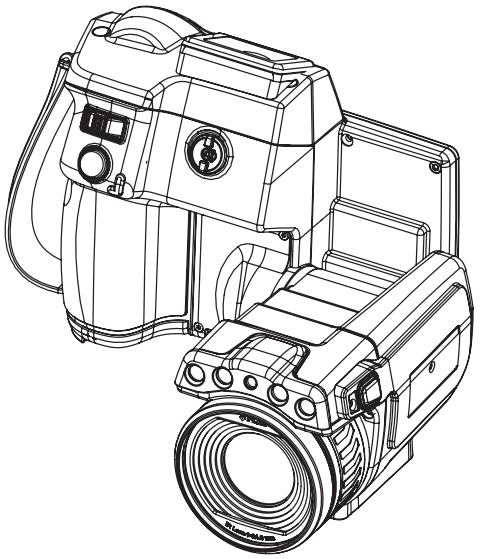

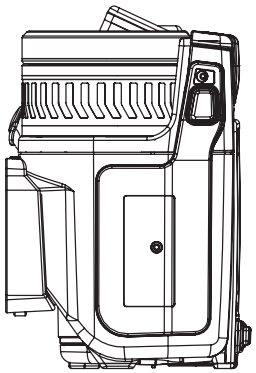

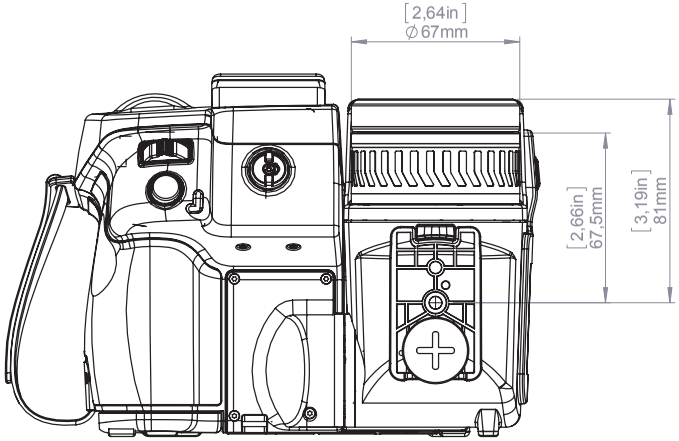

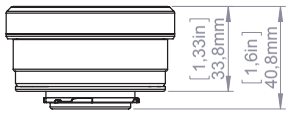

-

For additional dimensions see page 1

Modified	Check	Drawn by
2014-02-18	JOTA	R&D Thermography

Denomination

Basic dimensions FLIR T6xx mk II

Size	Sheet
A3	4(9)
Scale 1:2	
Drawing No. T128123	Size A

© 2012, FLIR Systems, Inc. All rights reserved worldwide. No part of this drawing may be reproduced, stored in a retrieval system, or transmitted in any form, or by any means, electronic, mechanical, photocopying, recording, or otherwise, without written permission from FLIR Systems, Inc. Specifications subject to change without further notice. Dimensional data is based on nominal values. Products may be subject to regional market considerations. License procedures may apply. Product may be subject to US Export Regulations. Please refer to exportquestions@flir.com with any questions. Diversion contrary to US law is prohibited.

Camera with Lens IR f=41,3 mm (15°)

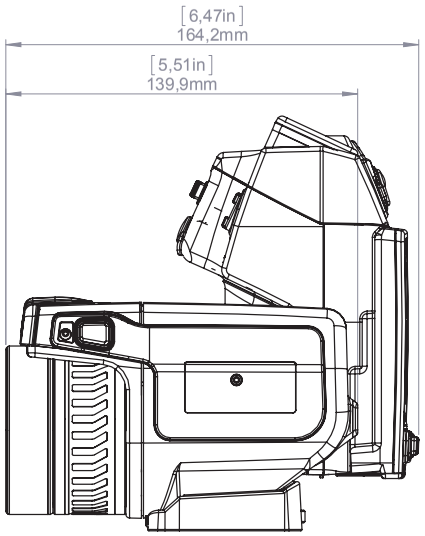

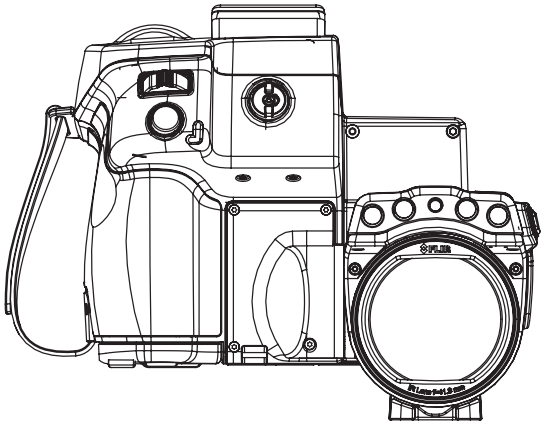

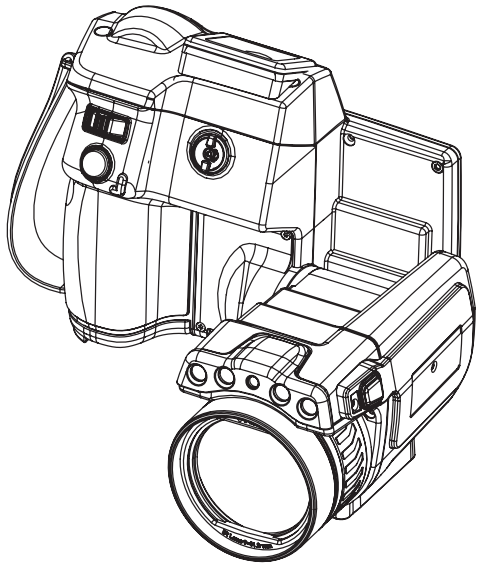

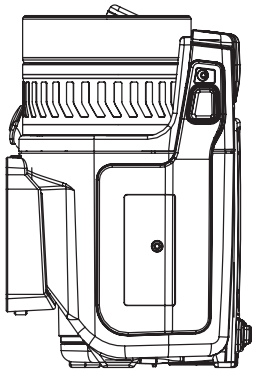

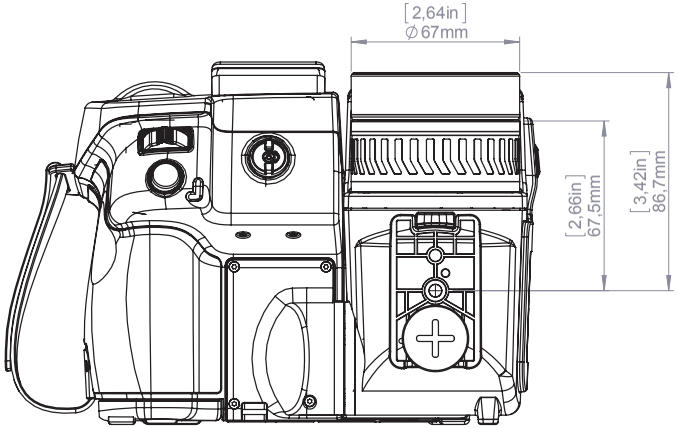

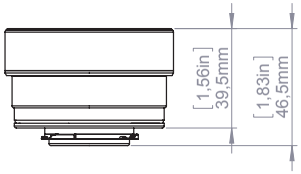

-

For additional dimensions see page 1

Modified	Check	Drawn by
2014-02-18	JOTA	R&D Thermography

Denomination

Basic dimensions FLIR T6xx mk II

Size	Sheet
A3	5(9)
Scale 1:2	
Drawing No. T128123	Size A

© 2012, FLIR Systems, Inc. All rights reserved worldwide. No part of this drawing may be reproduced, stored in a retrieval system, or transmitted in any form, or by any means, electronic, mechanical, photocopying, recording, or otherwise, without written permission from FLIR Systems, Inc. Specifications subject to change without further notice. Dimensional data is based on nominal values. Products may be subject to regional market considerations. License procedures may apply. Product may be subject to US Export Regulations. Please refer to exportquestions@flir.com with any questions. Diversion contrary to US law is prohibited.

Camera with Lens IR f=88,9 mm (7°) incl support

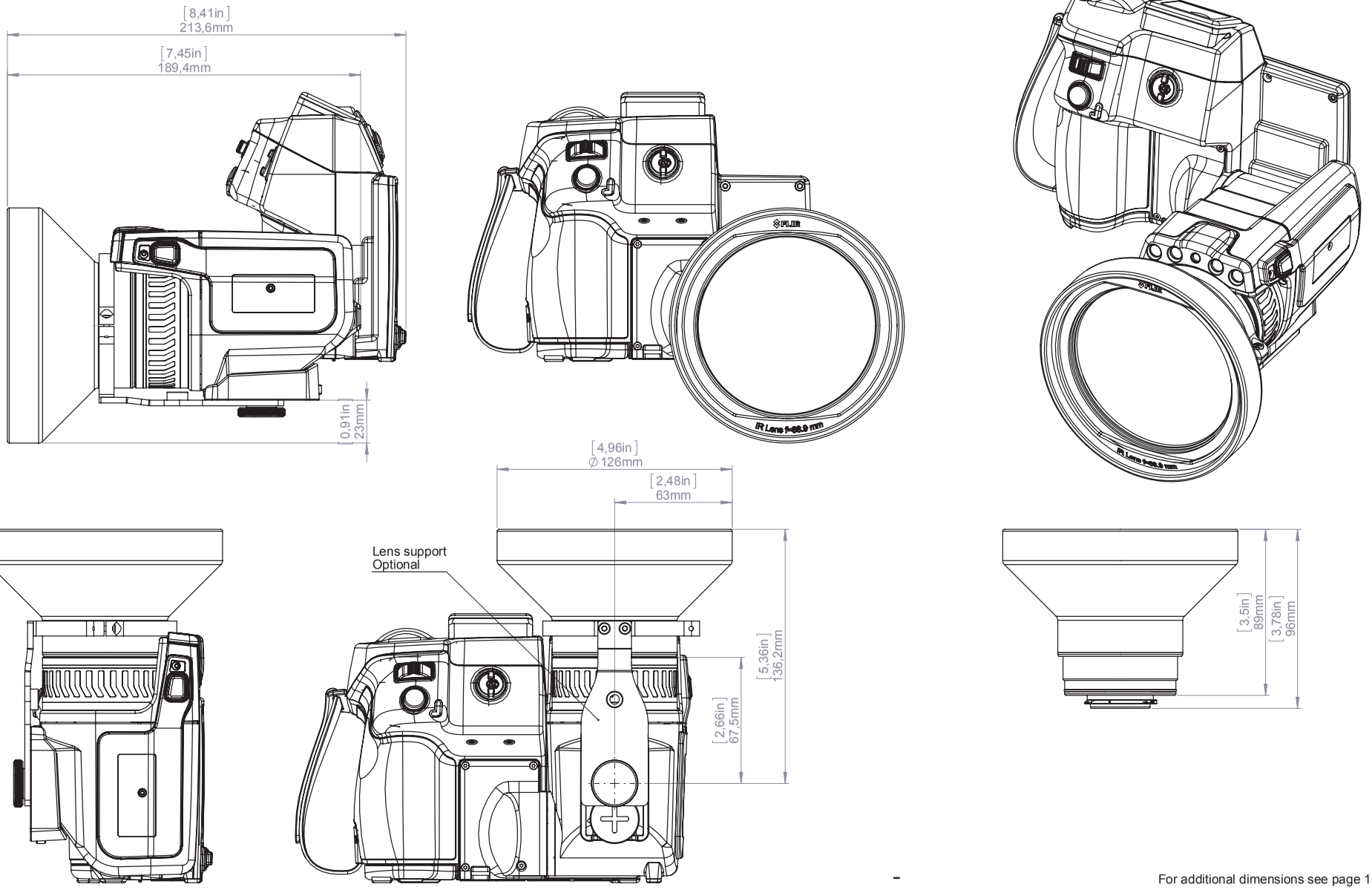

For additional dimensions see page 1

Modified	Check	Drawn by
2014-02-18	JOTA	R&D Thermography

Denomination

Basic dimensions FLIR T6xx mk II

Size	Sheet
A3	6(9)
Scale 1:2	
Drawing No. T128123	Size A

© 2012, FLIR Systems, Inc. All rights reserved worldwide. No part of this drawing may be reproduced, stored in a retrieval system, or transmitted in any form, or by any means, electronic, mechanical, photocopying, recording, or otherwise, without written permission from FLIR Systems, Inc. Specifications subject to change without further notice. Dimensional data is based on nominal values. Products may be subject to regional market considerations. License procedures may apply. Product may be subject to US Export Regulations. Please refer to exportquestions@flir.com with any questions. Diversion contrary to US law is prohibited.

Camera with Close-up lens 1,5X (25 µm)

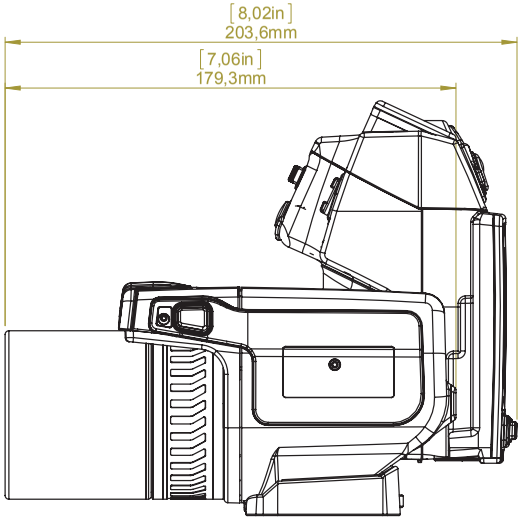

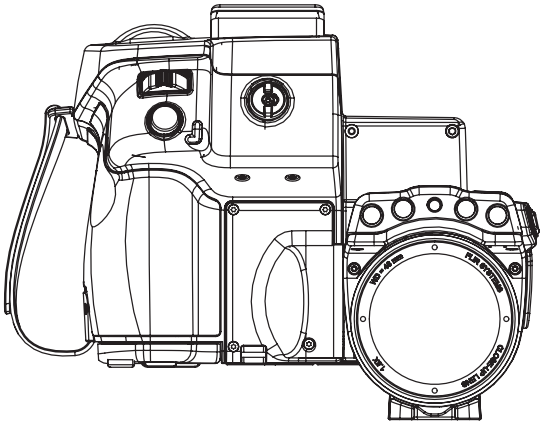

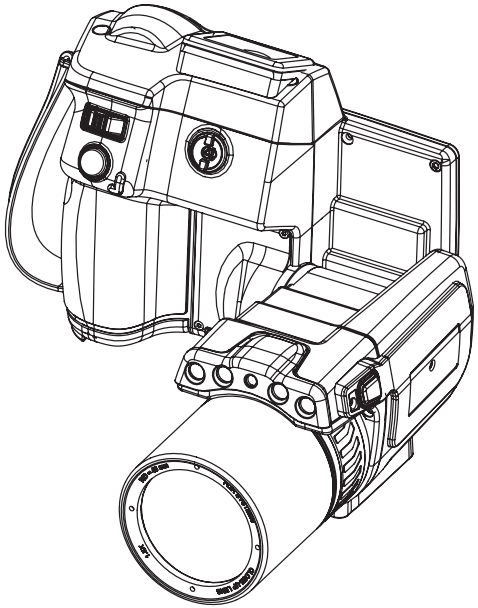

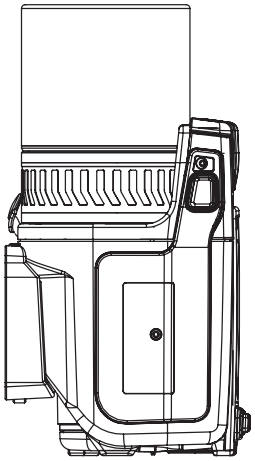

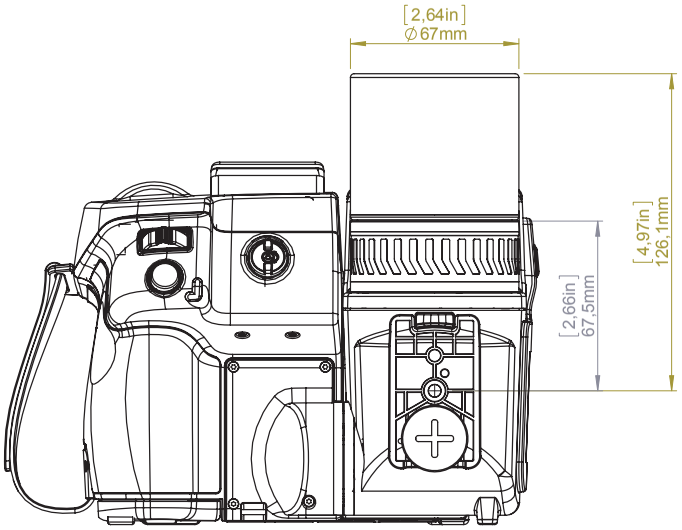

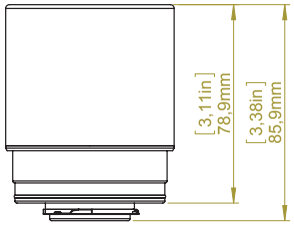

For additional dimensions see page 1

Modified	Check	Drawn by
2014-02-18	JOTA	R&D Thermography

Denomination

Basic dimensions FLIR T6xx mk II

Size	Sheet
A3	7(9)
Scale 1:2	
Drawing No. T128123	Size A

© 2012, FLIR Systems, Inc. All rights reserved worldwide. No part of this drawing may be reproduced, stored in a retrieval system, or transmitted in any form, or by any means, electronic, mechanical, photocopying, recording, or otherwise, without written permission from FLIR Systems, Inc. Specifications subject to change without further notice. Dimensional data is based on nominal values. Products may be subject to regional market considerations. License procedures may apply. Product may be subject to US Export Regulations. Please refer to exportquestions@flir.com with any questions. Diversion contrary to US law is prohibited.

Camera with Close-up lens 2,9X (50 µm)

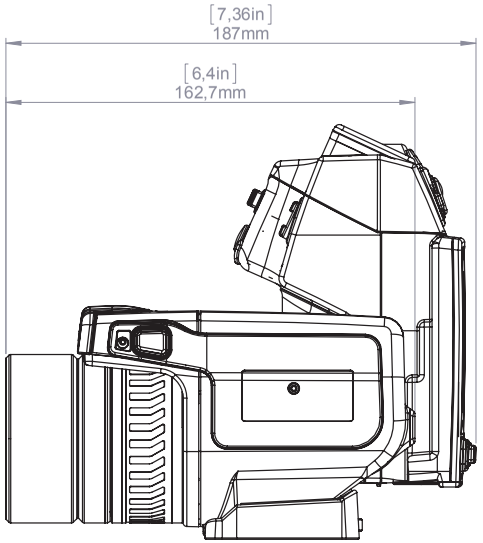

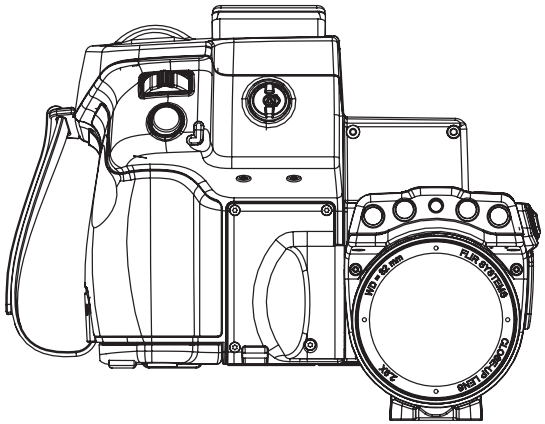

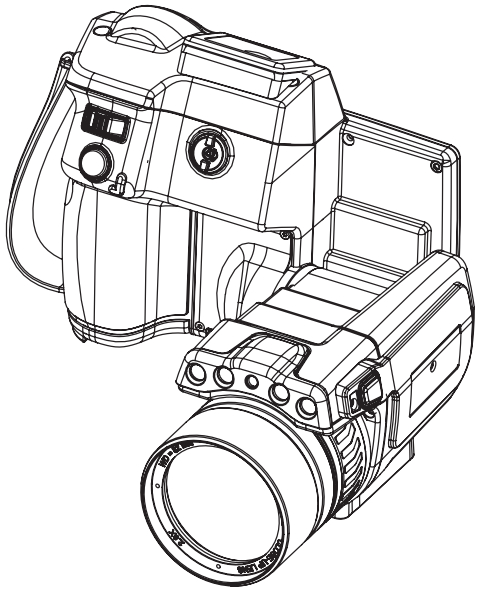

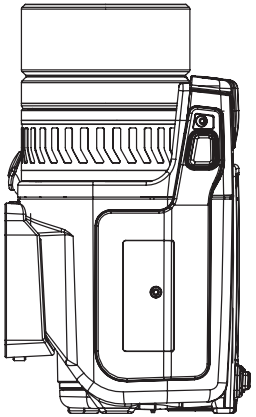

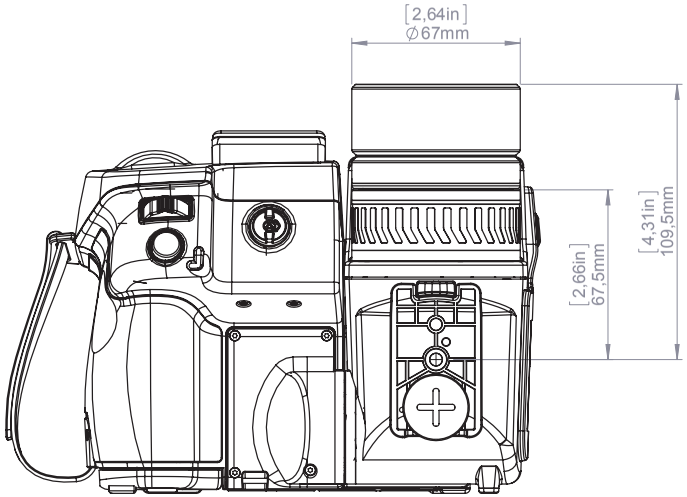

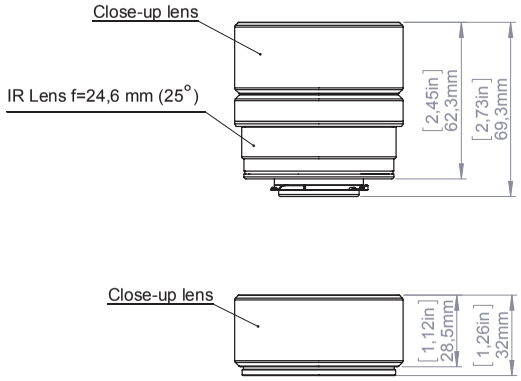

For additional dimensions see page 1

Modified	Check	Drawn by
2014-02-18	JOTA	R&D Thermography

Denomination

Basic dimensions FLIR T6xx mk II

Size	Sheet
A3	8(9)
Scale 1:2	
Drawing No. T128123	Size A

FLIR

© 2012, FLIR Systems, Inc. All rights reserved worldwide. No part of this drawing may be reproduced, stored in a retrieval system, or transmitted in any form, or by any means, electronic, mechanical, photocopying, recording, or otherwise, without written permission from FLIR Systems, Inc. Specifications subject to change without further notice. Dimensional data is based on nominal values. Products may be subject to regional market considerations. License procedures may apply. Product may be subject to US Export Regulations. Please refer to exportquestions@flir.com with any questions. Diversion contrary to US law is prohibited.

Camera with Close-up lens 5,8X (100 µm)

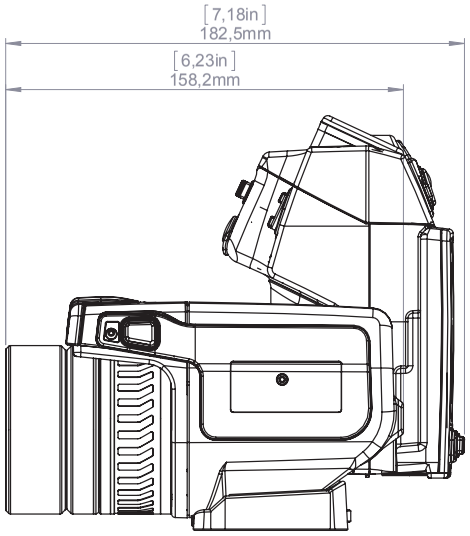

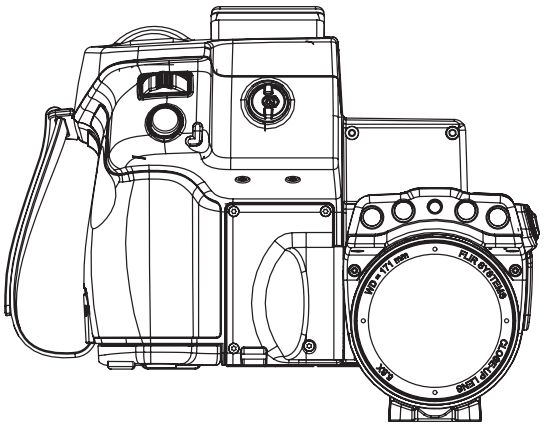

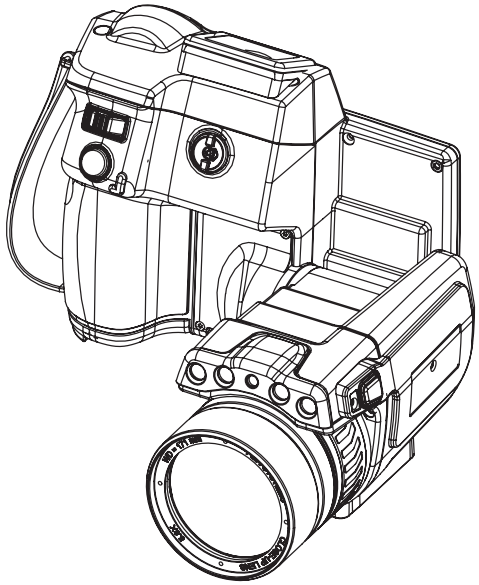

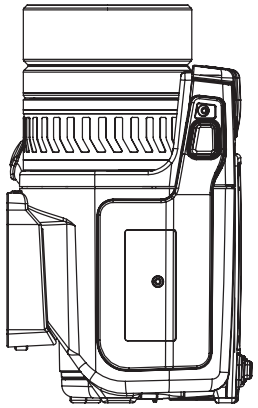

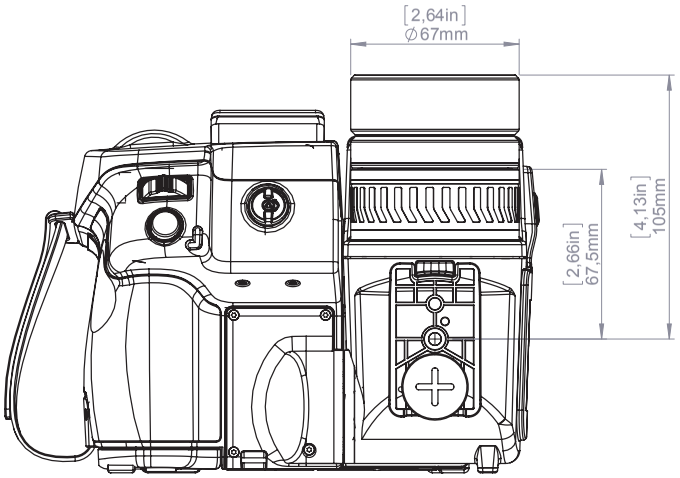

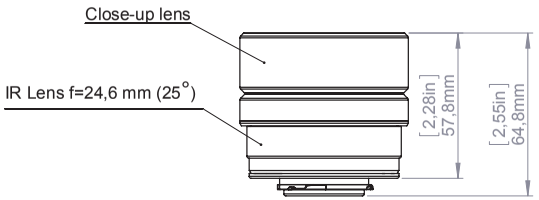

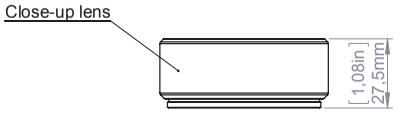

For additional dimensions see page 1

Modified	Check	Drawn by
2014-02-18	JOTA	R&D Thermography

Denomination

Basic dimensions FLIR T6xx mk II

Size	Sheet
A3	9(9)
Scale 1:2	
Drawing No. T128123	Size A

© 2012, FLIR Systems, Inc. All rights reserved worldwide. No part of this drawing may be reproduced, stored in a retrieval system, or transmitted in any form, or by any means, electronic, mechanical, photocopying, recording, or otherwise, without written permission from FLIR Systems, Inc. Specifications subject to change without further notice. Dimensional data is based on nominal values. Products may be subject to regional market considerations. License procedures may apply. Product may be subject to US Export Regulations. Please refer to exportquestions@flir.com with any questions. Diversion contrary to US law is prohibited.

March 25, 2013 AQ125879B

CE Declaration of Conformity

This is to certify that the System listed below have been designed and manufactured to meet the requirements, as applicable, of the following EU-Directives and corresponding harmonising standards. The systems consequently meet the requirements for the CE-mark.

Directives:

Directive 2004/108/EC;	**Electromagnetic Compatibility**
Directive 2006/95/EC;	**"Low voltage Directive"** (Power Supply)
Directive 1999/5/EC	**"R&TTE on radio equipment and telecommunications terminal equipment"**
Directive 2002/96/EC	**Waste electrical and electronic equipment; WEEE** (As applicable)

Standards:

Emission:	**EN 61000-6-3;**	**Electro magnetic Compatibility Generic standards - Emission**
Immunity:	**EN 61000-6-2;**	**Electro magnetic Compatibility; Generic standards - Immunity**
Safety (Power Supply)**:**	**EN 60950;** (or other)	**Safety of information technology equipment**
Radio	**ETSI EN 301489**	
System:	**FLIR T6xx series**	

FLIR Systems AB
Quality Assurance

Björn Svensson
Director